1024M x 8 bit DDR4 Synchronous DRAM (SDRAM)

Advance (Rev. 1.1, Aug. /2025)

Features

- JEDEC Standard Compliant
- Fast clock rate: 1333/1600MHz
- Power supplies:
  - V_{DD} & V_{DDQ} = +1.2V ± 0.06V
  - V_{PP} = +2.5V -0.125V / +0.25V
- Operating temperature: T_C = -40~95°C (Industrial)
- Supports JEDEC clock jitter specification
- Bidirectional differential data strobe, DQS &DQS#
- Differential Clock, CK & CK#
- 16 internal banks: 4 groups of 4 banks each
- Separated IO gating structures by Bank Group
- 8n-bit prefetch architecture
- Precharge & Active power down
- Auto Refresh and Self Refresh
- Low-power auto self refresh (LPASR)
- Self Refresh Abort
- Fine Granularity Refresh
- Dynamic ODT (R_{TT_PARK} & R_{TT_Nom} & R_{TT_WR})
- Write Leveling
- DQ Training via MPR
- Programmable preamble is supported both of $1t_{CK}$ and $2t_{CK}$ mode
- Command/Address (CA) Parity
- Data bus write cyclic redundancy check (CRC)
- Internal V_{REFDQ} Training
- Read Preamble Training
- Control Gear Down Mode
- Per DRAM Addressability (PDA)
- Output Driver Impedance Control
- Dynamic on-die termination (ODT)
- Input Data Mask (DM) and Data Bus Inversion (DBI)
- ZQ Calibration
- Command/Address latency (CAL)
- Maximum Power Saving Mode (MPSM)
- Asynchronous Reset
- DLL enable/disable
- Burst Length (BL8/BC4/BC4 or 8 on the fly)
- Burst type: Sequential / Interleave
- CAS Latency (CL)
- CAS Write Latency (CWL)
- Additive Latency (AL): 0, CL-1, CL-2
- Average refresh period
  - 8192 cycles/64ms (7.8us at -40°C ≤ T_C ≤ +85°C)
  - 8192 cycles/32ms (3.9us at +85°C ≤ T_C ≤ +95°C)
- Data Interface: Pseudo Open Drain (POD)
- RoHS compliant
- Hard post package repair (hPPR)
- Soft post package repair (sPPR)
- Package: Pb Free and Halogen Free
  - 78-ball 7.5 x 12 x 1.2mm FBGA

Table 1. Ordering Information

Part Number	Clock Frequency	Data Rate	Power Supply	Package
EM6OF08NWAND-07IH	1333MHz	2666Mbps/pin	V_{DD}/V_{DDQ} 1.2V, V_{PP} 2.5V	FBGA
EM6OF08NWAND-62IH	1600MHz	3200Mbps/pin	V_{DD}/V_{DDQ} 1.2V, V_{PP} 2.5V	FBGA

WAN: indicates 7.5 x 12 x 1.2mm FBGA Package
D: indicates Generation Code
I: indicates Industrial Grade
H: indicates Pb and Halogen Free

Table 2. Speed Grade Information

Speed Grade	Clock Frequency	CAS Latency	t_{RCD} (ns)	t_{RP} (ns)
DDR4-2666	1333MHz	19	14.25	14.25
DDR4-3200	1600MHz	22	13.75	13.75

Etron Technology, Inc.
No. 6, Technology Road 5, Hsinchu Science Park, Hsinchu, Taiwan 300092, R.O.C.
TEL: (886)-3-5782345

Etron Technology, Inc. reserves the right to change products or specification without notice.

Ball Assignment

	1	2	3	…	7	8	9
A	VDD	VSSQ	TDQS#		DM#/DBI#/TDQS	VSSQ	VSS
B	VPP	VDDQ	DQS#		DQ1	VDDQ	ZQ
C	VDDQ	DQ0	DQS		VDD	VSS	VDDQ
D	VSSQ	DQ4	DQ2		DQ3	DQ5	VSSQ
E	VSS	VDDQ	DQ6		DQ7	VDDQ	VSS
F	VDD	NC	ODT		CK	CK#	VDD
G	VSS	NC	CKE		CS#	NC	NC
H	VDD	WE#/A14	ACT#		CAS#/A15	RAS#/A16	VSS
J	VREFCA	BG0	A10/AP		A12/BC#	BG1	VDD
K	VSS	BA0	A4		A3	BA1	VSS
L	Reset#	A6	A0		A1	A5	Alert#
M	VDD	A8	A2		A9	A7	VPP
N	VSS	A11	PAR		NC	A13	VDD

Figure 1. 78-Ball (FBGA Top View)

Functional Block Diagram

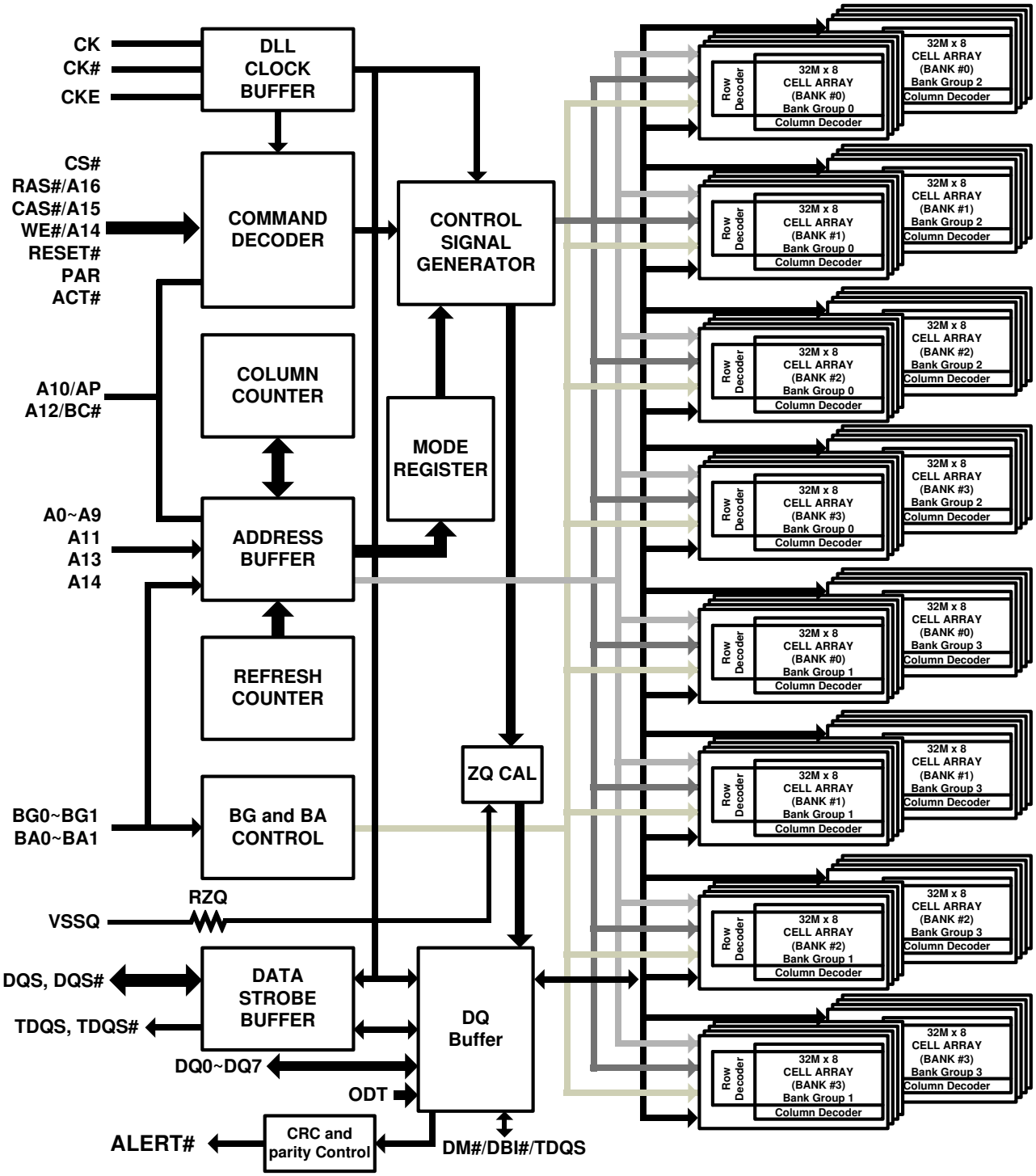

Figure 2. Block Diagram

Simplified State Diagram

This simplified State Diagram is intended to provide an overview of the possible state transitions and the commands to control them. In particular, situations involving more than on bank, the enabling or disabling of on-die termination, and some other events are not captured in full detail.

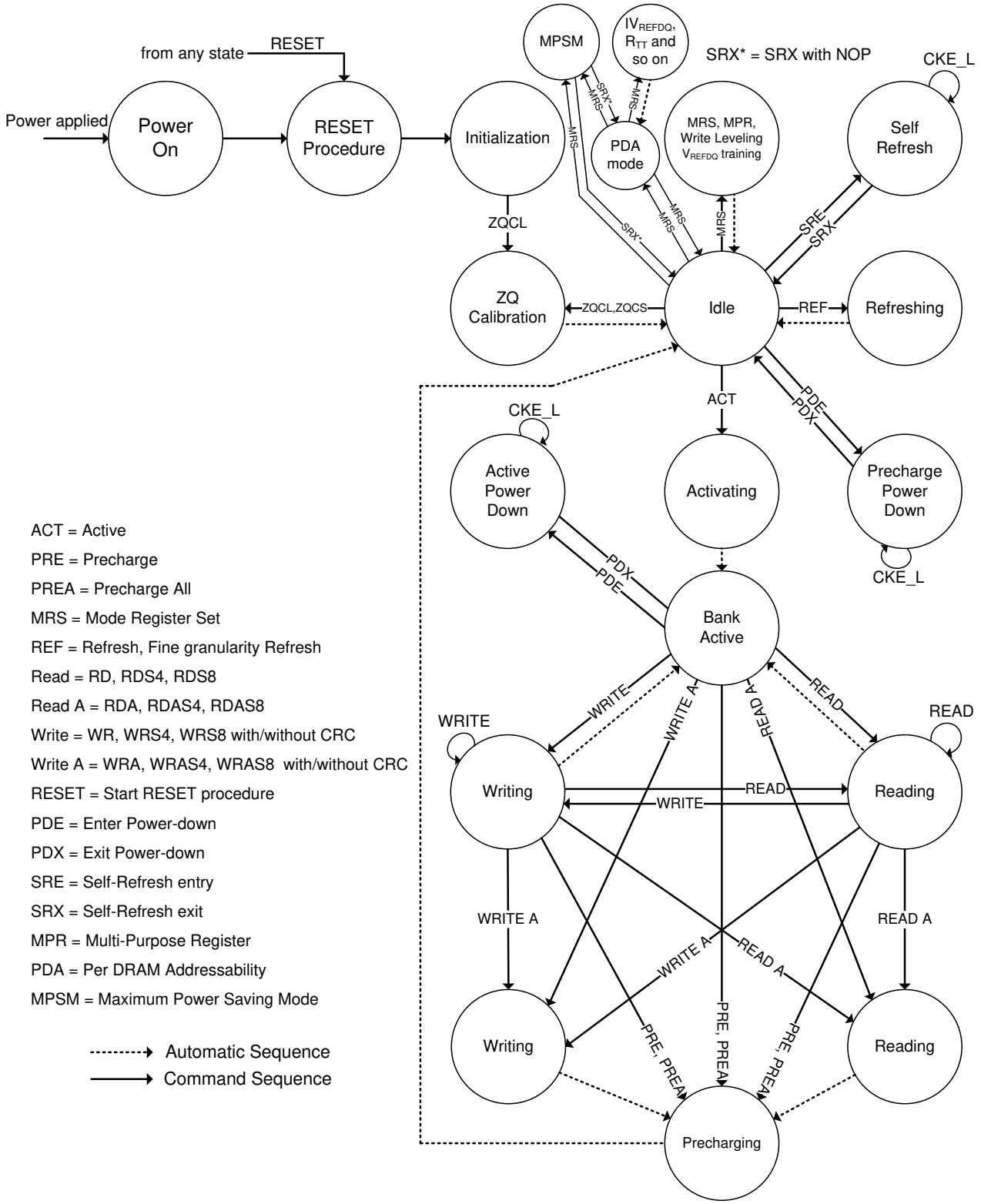

Figure 3. State Diagram

Ball Descriptions

Table 3. Ball Details

Symbol	Type	Description
CK, CK#	Input	**Clock:** CK and CK# are differential clock inputs. All control and address input signals are sampled on the crossing of the positive edge of CK and the negative edge of CK#.
CKE	Input	**Clock Enable:** CKE high activates, and CKE low deactivates, internal clock signals and device input buffers and output drivers. Taking CKE low provides Precharge Power Down and Self-Refresh operation (all banks idle), or Active Power Down (row Active in any bank). CKE is asynchronous for Self-Refresh exit. After V_{REFCA} and Internal DQ V_{REF} have become stable during the power on and initialization sequence, they must be maintained during all operations (including Self-Refresh). CKE must be maintained high throughout read and write accesses. Input buffers, excluding CK, CK#, ODT and CKE, are disabled during power down. Input buffers, excluding CKE, are disabled during Self-Refresh.
CS#	Input	**Chip Select:** All commands are masked when CS# is registered high. CS# provides for external Rank selection on systems with multiple Ranks. CS# is considered part of the command code.
ODT	Input	**On Die Termination:** ODT (registered high) enables R_{TT_NOM} termination resistance internal to the DDR4 SDRAM. When enabled, ODT is only applied to each DQ, DQS, DQS# and DM#/DBI#/TDQS, TDQS# (When TDQS is enabled via Mode Register A11=1 in MR1) signal. The ODT pin will be ignored if MR1 is programmed to disable R_{TT_NOM}.
ACT#	Input	**Activation Command Input:** ACT# defines the Activation command being entered along with CS#. The input into RAS#/A16, CAS#/A15 and WE#/A14 will be considered as Row Address A16, A15 and A14.
RAS#/A16 CAS#/A15 WE#/A14	Input	**Command Inputs:** RAS#/A16, CAS#/A15 and WE#/A14 (along with CS#) define the command being entered. Those pins have multi function. For example, for activation with ACT# low, those are Addressing like A16, A15 and A14 but for non-activation command with ACT# high, those are Command pins for Read, Write and other command defined in command truth table.
DM#/ DBI#/ TDQS	Input / Output	**Input Data Mask and Data Bus Inversion:** DM# is an input mask signal for write data. Input data is masked when DM# is sampled low coincident with that input data during a Write access. DM# is sampled on both edges of DQS. The function of DM or TDQS is enabled by Mode Register A11 setting in MR1.DM is muxed with DBI function by Mode Register A10, A11, A12 setting in MR5. DBI# is an input /output identifying whether to store/output the true or inverted data. If DBI# is low the data will be stored /output after inversion inside the DDR4 SDRAM and not inverted if DBI# is high.
BG0-BG1	Input	**Bank Group Inputs:** BG0-BG1 define to which bank group an Active, Read, Write or Precharge command is being applied. BG0-BG1 also determines which mode register is to be accessed during a MRS cycle.
BA0-BA1	Input	**Bank Address:** BA0-BA1 define to which bank an Active, Read, Write, or Precharge command is being applied. Bank address also determines which mode register is to be accessed during a MRS cycle.
A0-A16	Input	**Address Inputs:** Provide the row address (A0~A15) for Activate Commands and the column address (A0~A9) for Read/Write commands to select one location out of the memory array in the respective bank. (A10/AP, A12/BC#, RAS#/A16, CAS#/A15 and WE#/A14 have additional functions, see other rows. The address inputs also provide the op-code during Mode Register Set commands.
A10/AP	Input	**Auto-precharge:** A10 is sampled during Read/Write commands to determine whether Autoprecharge should be performed to the accessed bank after the Read/Write operation. (High: Autoprecharge; low: no Autoprecharge). A10 is sampled during a Precharge command to determine whether the Precharge applies to one bank (A10 low) or all banks (A10 high). If only one bank is to be precharged, the bank is selected by bank addresses.

A12/BC#	Input	**Burst Chop:** A12/BC# is sampled during Read and Write commands to determine if burst chop (on-the-fly) will be performed. (high, no burst chop; low: burst chopped). See command truth table for details.
Reset#	Input	**Active Low Asynchronous Reset:** Reset is active when Reset# is low, and inactive when Reset# is high. Reset# must be high during normal operation. Reset# is a CMOS rail-to-rail signal with DC high and low at 80% and 20% of V_{DD}.
DQ0-DQ7	Input / Output	**Data Input/ Output:** Bi-directional data bus. If CRC is enabled via Mode register then CRC code is added at the end of Data Burst. Any DQ from DQ0~DQ3 may indicate the internal V_{REF} level during test via Mode Register Setting MR4 A4=high. During this mode, R_{TT} should be set Hi-Z.
DQS, DQS#	Input / Output	**Data Strobe:** output with read data, input with write data. Edge-aligned with read data, centered in write data. DQS corresponds to the data on DQ0-DQ7. The data strobe DQS are paired with differential signals DQS#, respectively, to provide differential pair signaling to the system during reads and writes. DDR4 SDRAM supports differential data strobe only and does not support single-ended.
TDQS, TDQS#	Input / Output	**Termination Data Strobe:** TDQS/TDQS# is applicable for x8 DRAMs only. When enabled via Mode Register A11 = 1 in MR1, the DRAM will enable the same termination resistance function on TDQS/TDQS# that is applied to DQS/DQS#. When disabled via mode register A11 = 0 in MR1, DM/DBI/TDQS will provide the data mask function or Data Bus Inversion depending on MR5; A11,12,10 and TDQS# is not used.
PAR	Input	**Command and Address Parity Input:** DDR4 Supports Even Parity check in DRAM with MR setting. Once it's enabled via Register in MR5, then DRAM calculates Parity with ACT#, RAS#/A16, CAS#/A15, WE#/A14, BG0-BG1, BA0-BA1, and A16-A0. Command and address inputs shall have parity check performed when commands are latched via the rising edge of CK and when CS# is low.
Alert#	Output	**Alert:** It has multi functions such as CRC error flag, Command and Address Parity error flag as Output signal. If there is error in CRC, then Alert# goes low for the period time interval and goes back high. If there is error in Command Address Parity Check, then Alert# goes low for relatively long period until ongoing DRAM internal recovery transaction to complete. Using this signal or not is dependent on system. In case of not connected as Signal, Alert# Pin must be bounded to V_{DD} on board.
NC	-	**No Connect:** These pins should be left unconnected.
V_{DD}	Supply	**Power Supply:** +1.2V ±0.06V.
V_{SS}	Supply	**Ground**
V_{DDQ}	Supply	**DQ Power Supply:** +1.2V ±0.06V.
V_{SSQ}	Supply	**DQ Ground**
V_{PP}	Supply	**DRAM Activating Power Supply:** 2.5V (2.375V min , 2.75V max)
V_{REFCA}	Supply	**Reference voltage for CA**
ZQ	Supply	**Reference pin for ZQ calibration.**
NOTE: Input only pins (BG0-BG1, BA0-BA1, A0-A16, ACT#, RAS#/A16, CAS#/A15, WE#/A14, CS#, CKE, ODT, and RESET#) do not supply termination.		

Basic Functionality

The DDR4 SDRAM is a high-speed dynamic random-access memory internally organized with sixteen-banks (4 bank groups each with 4 banks). The DDR4 SDRAM uses a 8n prefetch architecture to achieve high-speed operation. The 8n prefetch architecture is combined with an interface designed to transfer two data words per clock cycle at the I/O pins. A single read or write operation for the DDR4 SDRAM consists of a single 8n-bit wide, four clock data transfer at the internal DRAM core and eight corresponding n-bit wide, one-half clock cycle data transfers at the I/O pins.

Read and write operation to the DDR4 SDRAM are burst oriented, start at a selected location, and continue for a burst length of eight or a 'chopped' burst of four in a programmed sequence. Operation begins with the registration of an Activate Command, which is then followed by a Read or Write command. The address bits registered coincident with the Activate Command are used to select the bank and row to be activated (BG0-BG1 select the bank group; BA0-BA1 select the bank; A0-A15 select the row). The address bits registered coincident with the Read or Write command are used to select the starting column location for the burst operation, determine if the auto precharge command is to be issued (via A10), and select BC4 or BL8 mode 'on the fly' (via A12) if enabled in the mode register.

Prior to normal operation, the DDR4 SDRAM must be powered up and initialized in a predefined manner. The following sections provide detailed information covering device reset and initialization, register definition, command descriptions, and device operation.

Reset and Initialization Procedure

For power-up and reset initialization, in order to prevent DRAM from functioning improperly, default values for the following MR settings need to be defined:

Gear down mode (MR3 A[3]) : 0 = 1/2 Rate
Per DRAM Addressability (MR3 A[4]) : 0 = Disable
Max Power Saving Mode (MR4 A[1]) : 0 = Disable
CS# to Command/Address Latency (MR4 A[8:6]) : 000 = Disable
CA Parity Latency Mode (MR5 A[2:0]) : 000 = Disable
Hard Post Package Repair mode (MR4 A[13]) : 0 = Disable
Soft Post Package Repair mode (MR4 A[5]) : 0 = Disable

Power-up Initialization Sequence

The following sequence is required for Power up and Initialization:

1. Apply power (Reset# is recommended to be maintained below 0.2 x V_{DD}; all other inputs may be undefined). Reset# needs to be maintained below 0.2 x V_{DD} for minimum 200us with stable power need to be maintained below 0.2 x V_{DD} for minimum 700us with stable power. CKE is pulled "Low" anytime before Reset# being de-asserted (min. time 10ns). The power voltage ramp time between 300mV to $V_{DD,min}$ must be no greater than 200ms; and during the ramp, $V_{DD} \geq V_{DDQ}$ and (V_{DD}-V_{DDQ}) < 0.3 V. V_{PP} must ramp at the same time or earlier than V_{DD} and V_{PP} must be equal to or higher than V_{DD} at all times.

   During power-up, either of the following conditions may exist and must be met:

   Condition A:
   - V_{DD} and V_{DDQ} are driven from a single power converter output, AND
   - The voltage levels on all pins other than V_{DD}, V_{DDQ}, V_{SS}, V_{SSQ} must be less than or equal to V_{DDQ} and V_{DD} on one side and must be larger than or equal to V_{SSQ} and V_{SS} on the other side. In addition, V_{TT} is limited to 0.76 V max once power ramp is finished, AND
   - V_{REFCA} tracks V_{DD}/2.

   Condition B:
   - Apply V_{DD} without any slope reversal before or at the same time as V_{DDQ}
   - Apply V_{DDQ} without any slope reversal before or at the same time as V_{TT} & V_{REFCA}.
   - Apply V_{PP} without any slope reversal before or at the same time as V_{DD}.
   - The voltage levels on all pins other than V_{DD}, V_{DDQ}, V_{SS}, V_{SSQ} must be less than or equal to V_{DDQ} and V_{DD} on one side and must be larger than or equal to V_{SSQ} and V_{SS} on the other side.
2. After Reset# is de-asserted, wait for another 500us until CKE becomes active. During this time, the DRAM will start internal initialization; this will be done independently of external clocks.

3. Clocks (CK, CK#) need to be started and stabilized for at least 10ns or $5t_{CK}$ (which is larger) before CKE goes active. Since CKE is a synchronous signal, the corresponding setup time to clock (t_{IS}) must be met. Also a Deselect command must be registered (with t_{IS} set up time to clock) at clock edge Td. Once the CKE registered "high" after Reset, CKE needs to be continuously registered "high" until the initialization sequence is finished, including expiration of t_{DLLK} and t_{ZQinit}.
4. The DDR4 SDRAM keeps its on-die termination in high-impedance state as long as Reset# is asserted. Further, the SDRAM keeps its on-die termination in high impedance state after Reset# deassertion until CKE is registered high. The ODT input signal may be in undefined state until t_{IS} before CKE is registered high. When CKE is registered high, the ODT input signal may be statically held at either low or high. If R_{TT_NOM} is to be enabled in MR1 the ODT input signal must be statically held low. In all cases, the ODT input signal remains static until the power up initialization sequence is finished, including the expiration of t_{DLLK} and t_{ZQinit}.
5. After CKE is being registered high, wait minimum of Reset CKE Exit time, t_{XPR}, before issuing the first MRS command to load mode register. (t_{XPR}=Max(t_{XS}, 5nCK)]
6. Issue MRS Command to load MR3 with all application settings (To issue MRS command to MR3, provide " low" to BG0, "high" to BA1, BA0)
7. Issue MRS command to load MR6 with all application settings (To issue MRS command to MR6, provide "low" to BA0, "high" to BG0, BA1)
8. Issue MRS command to load MR5 with all application settings (To issue MRS command to MR5, provide "low" to BA1, "high" to BG0, BA0)
9. Issue MRS command to load MR4 with all application settings (To issue MRS command to MR4, provide "Low" to BA1, BA0, "High" to BG0)
10. Issue MRS command to load MR2 with all application settings (To issue MRS command to MR2, provide "Low" to BG0, BA0, "High" to BA1)
11. Issue MRS command to load MR1 with all application settings (To issue MRS command to MR1, provide "Low" to BG0, BA1, "High" to BA0)
12. Issue MRS command to load MR0 with all application settings (To issue MRS command to MR0, provide "Low" to BG0, BA1, BA0)
13. Issue ZQCL command to starting ZQ calibration.
14. Wait for both t_{DLLK} and t_{ZQinit} completed.
15. The DDR4 SDRAM is now ready for Read/Write training (include V_{REF} training and Write leveling).

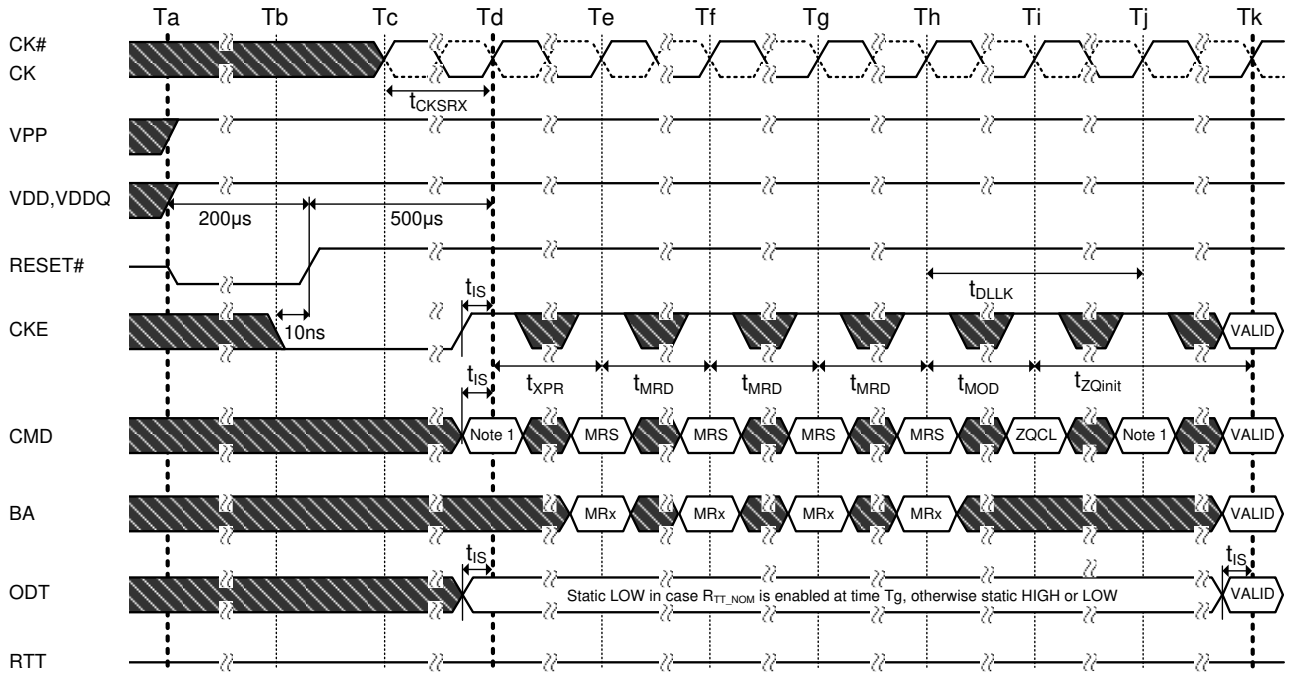

NOTE 1. From time point "Td" until "Tk " DES commands must be applied between MRS and ZQCL commands.
NOTE 2. MRS Commands must be issued to all Mode Registers that have defined settings.

Figure 4. Reset# and Initialization Sequence at Power-on Ramping

V_{DD} Slew rate at Power-up Initialization Sequence

Table 4. V_{DD} Slew Rate

Symbol	Min.	Max.	Units	Notes
V_{DD}_sl	0.004	600	V/ms	1,2
V_{DD}_on	-	200	ms	1,3

Notes:
1. Measurement made between 300mv and 80% V_{DD} minimum.
2. 20 MHz bandlimited measurement.
3. Maximum time to ramp V_{DD} from 300 mv to V_{DD} minimum.

Reset Initialization with Stable Power

The following sequence is required for Reset at no power interruption initialization:
1. Asserted Reset# below 0.2 x V_{DD} anytime when reset is needed (all other inputs may be undefined). Reset# needs to be maintained for minimum t_{PW_Reset}. CKE is pulled "low" before Reset# being de-asserted (min. time 10 ns).
2. Follow steps 2 to 10 in “Power-up Initialization Sequence”.
3. The Reset sequence is now completed, DDR4 SDRAM is ready for Read/Write training (include V_{REF} training and Write leveling)

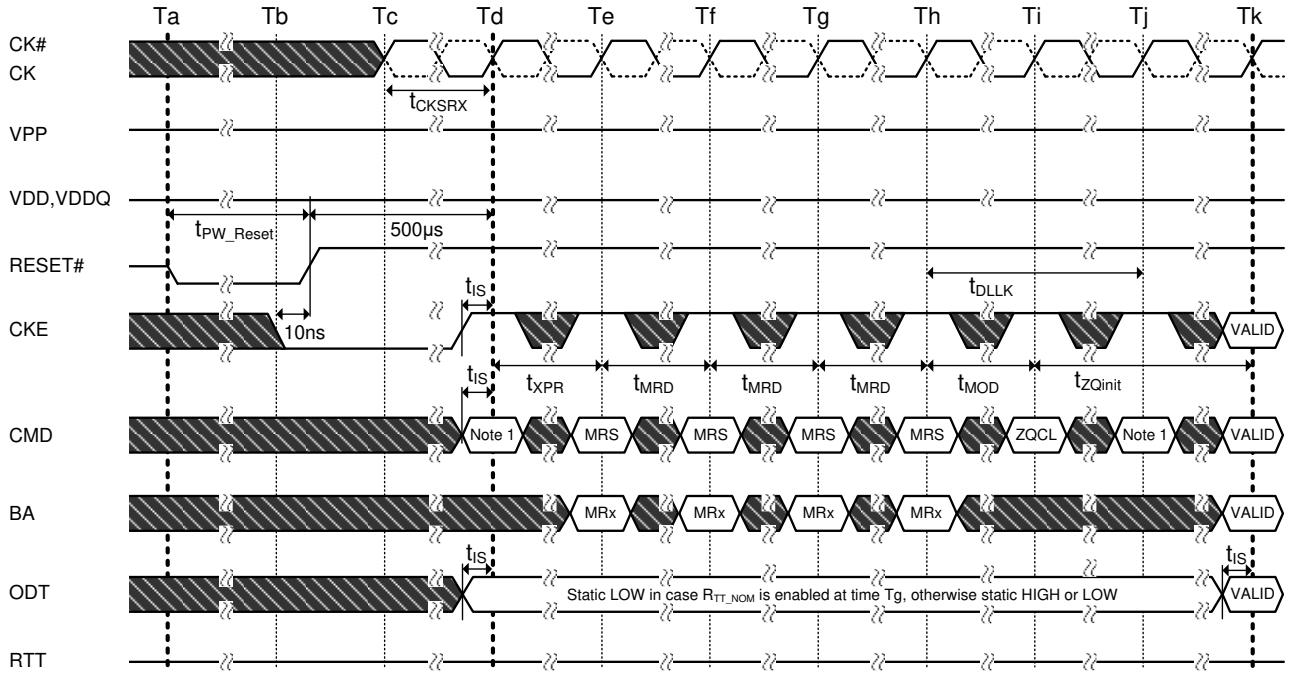

NOTE 1. From time point "Td" until "Tk " DES commands must be applied between MRS and ZQCL commands.
NOTE 2. MRS Commands must be issued to all Mode Registers that have defined settings.

TIME BREAK **DON'T CARE**

Figure 5. Reset Procedure at Power Stable

Operation Mode Truth Table

Notes 1, 2, 3 and 4 apply to the entire Command Truth Table.
Note 5 Applies to all Read/Write commands.
[BG=Bank Group Address, BA=Bank Address, RA=Row Address, CA=Column Address, BC#=Burst Chop, X=Don't Care, V=Valid].

Table 5. Command Truth Table

Function	Symbol	CKE_{n-1}	CKE_n	CS#	ACT#	RAS# /A16	CAS# /A15	WE#/ A14	BG_{0-1}	BA_{0-1}	BC#/ A12	A13, A11	A10/ AP	A0-A9
Mode Register Set	MRS	H	H	L	H	L	L	L	BG	BA	OP Code			
Refresh	REF	H	H	L	H	L	L	H	V	V	V	V	V	V
Self Refresh Entry [7,9]	SRE	H	L	L	H	L	L	H	V	V	V	V	V	V
Self Refresh Exit [7-10]	SRX	L	H	H	X	X	X	X	X	X	X	X	X	X
				L	H	H	H	H	V	V	V	V	V	V
Single Bank Precharge	PRE	H	H	L	H	L	H	L	BG	BA	V	V	L	V
Precharge all Banks	PREA	H	H	L	H	L	H	L	V	V	V	V	H	V
RFU	RFU	H	H	L	H	L	H	H	RFU	RFU	RFU	RFU	RFU	RFU
Bank Activate	ACT	H	H	L	L	RA	RA	RA	BG	BA	RA	RA	RA	RA
Write (Fixed BL8 or BC4)	WR	H	H	L	H	H	L	L	BG	BA	V	V	L	CA
Write (BC4, on the Fly)	WRS4	H	H	L	H	H	L	L	BG	BA	L	V	L	CA
Write (BL8, on the Fly)	WRS8	H	H	L	H	H	L	L	BG	BA	H	V	L	CA
Write with Auto Precharge (Fixed BL8 or BC4)	WRA	H	H	L	H	H	L	L	BG	BA	V	V	H	CA
Write with Auto Precharge (BC4, on the Fly)	WRAS4	H	H	L	H	H	L	L	BG	BA	L	V	H	CA
Write with Auto Precharge (BL8, on the Fly)	WRAS8	H	H	L	H	H	L	L	BG	BA	H	V	H	CA
Read (Fixed BL8 or BC4)	RD	H	H	L	H	H	L	H	BG	BA	V	V	L	CA
Read (BC4, on the Fly)	RDS4	H	H	L	H	H	L	H	BG	BA	L	V	L	CA
Read (BL8, on the Fly)	RDS8	H	H	L	H	H	L	H	BG	BA	H	V	L	CA
Read with Auto Precharge (Fixed BL8 or BC4)	RDA	H	H	L	H	H	L	H	BG	BA	V	V	H	CA
Read with Auto Precharge (BC4, on the Fly)	RDAS4	H	H	L	H	H	L	H	BG	BA	L	V	H	CA
Read with Auto Precharge (BL8, on the Fly)	RDAS8	H	H	L	H	H	L	H	BG	BA	H	V	H	CA
No Operation	NOP	H	H	L	H	H	H	H	V	V	V	V	V	V
Device Deselected	DES	H	H	H	X	X	X	X	X	X	X	X	X	X
Power Down Entry [6]	PDE	H	L	H	X	X	X	X	X	X	X	X	X	X
Power Down Exit [6]	PDX	L	H	H	X	X	X	X	X	X	X	X	X	X
ZQ calibration Long	ZQCL	H	H	L	H	H	H	L	V	V	V	V	H	V
ZQ calibration Short	ZQCS	H	H	L	H	H	H	L	V	V	V	V	L	V

Note 1. All DDR4 SDRAM commands are defined by states of CS#, ACT#, RAS#/A16, CAS#/A15, WE#/A14 and CKE at the rising edge of the clock. The MSB of BG, BA, RA and CA are device density and configuration dependent. When ACT# = H; pins RAS#/A16, CAS#/A15, and WE#/A14 are used as command pins RAS#, CAS#, and WE# respectively. When ACT# = L; pins RAS#/A16, CAS#/A15, and WE#/A14 are used as address pins A16, A15, and A14 respectively.
Note 2. Reset# is low enable command which will be used only for asynchronous reset so must be maintained high during any function.
Note 3. Bank Group addresses (BG) and Bank addresses (BA) determine which bank within a bank group to be operated upon. For MRS commands the BG and BA selects the specific Mode Register location.
Note 4. "V" means "H or L (but a defined logic level)" and "X" means either "defined or undefined (like floating) logic level".
Note 5. Burst reads or writes cannot be terminated or interrupted and Fixed/on-the-Fly BL will be defined by MRS.
Note 6. The Power Down Mode does not perform any refresh operation.
Note 7. The state of ODT does not affect the states described in this table. The ODT function is not available during Self Refresh.
Note 8. Controller guarantees self refresh exit to be synchronous.
Note 9. V_{PP} and V_{REF}(V_{REFCA}) must be maintained during Self Refresh operation.
Note 10. The No Operation (NOP) command may be used only when exiting maximum power saving mode or when entering gear-down mode.
Note 11. Refer to the CKE Truth Table for more detail with CKE transition.

Table 6. CKE Truth Table

Current State (2)	CKEn-1 (1)	CKEn (1)	Command n (3) RAS#, CAS#, WE#, CS#	Action n (3)	Notes
Power-Down	L	L	X	Maintain Power-Down	14,15
	L	H	Deselect	Power-Down Exit	11,14
Self-Refresh	L	L	X	Maintain Self-Refresh	15,16
	L	H	Deselect	Self-Refresh Exit	8,12,16
Bank(s) Active	H	L	Deselect	Active Power-Down Entry	11,13,14
Reading	H	L	Deselect	Power-Down Entry	11,13,14,17
Writing	H	L	Deselect	Power-Down Entry	11,13,14,17
Precharging	H	L	Deselect	Power-Down Entry	11,13,14,17
Refreshing	H	L	Deselect	Precharge Power-Down Entry	11
All Banks Idle	H	L	Deselect	Precharge Power-Down Entry	11,13,14,18
	H	L	Refresh	Self-Refresh	9,13,18
See Command Truth Table for additional command details					10

Notes:

1. CKEn is the logic state of CKE at clock edge n; CKEn-1 was the state of CKE at the previous clock edge.
2. Current state is defined as the state of the DDR4 SDRAM immediately prior to clock edge n.
3. Command n is the command registered at clock edge n, and Action n is a result of command n, ODT is not included here.
4. All states and sequences not shown are illegal or reserved unless explicitly described elsewhere in this document.
5. The state of ODT does not affect the states described in this table. The ODT function is not available during Self Refresh.
6. During any CKE transition (registration of CKE H → L or CKE L → H) the CKE level must be maintained until 1nCK prior to t_{CKEmin} being satisfied (at which time CKE may transition again).
7. Deselect and NOP are defined in the Command Truth Table.
8. On Self Refresh Exit Deselect commands must be issued on every clock edge occurring during the t_{XS} period. Read or ODT commands may be issued only after t_{XSDLL} is satisfied.
9. Self Refresh mode can only be entered from the All Banks Idle state.
10. Must be a legal command as defined in the Command Truth Table.
11. Valid commands for Power Down Entry and Exit are Deselect only.
12. Valid commands for Self Refresh Exit are Deselect only. except for Gear Down mode and Max Power Saving exit. NOP is allowed for these 2 modes.
13. Self Refresh cannot be entered during Read or Write operations. For a detailed list of restrictions see section “Self-Refresh Operation” and see section “Power-Down Modes”.
14. The Power Down does not perform any refresh operations.
15. “X” means “don't care” (including floating around V_{REF}) in Self Refresh and Power Down. It also applies to Address pins.
16. V_{PP} and V_{REF} (V_{REFCA}) must be maintained during Self Refresh operation.
17. If all banks are closed at the conclusion of the read, write or precharge command, then Precharge Power Down is entered, otherwise Active Power Down is entered.
18. ‘Idle state’ is defined as all banks are closed (t_{RP}, t_{DAL}, etc. satisfied), no data bursts are in progress, CKE is high, and all timings from previous operations are satisfied (t_{MRD}, t_{MOD}, t_{RFC}, t_{ZQinit}, t_{ZQoper}, t_{ZQCS}, etc.) as well as all Self Refresh exit and Power Down Exit parameters are satisfied (t_{XS}, t_{XP}, etc).

Programming the Mode Registers

For application flexibility, various functions, features, and modes are programmable in seven Mode Registers, provided by the DDR4 SDRAM, as user defined variables and they must be programmed via a Mode Register Set (MRS) command. The mode registers are divided into various fields depending on the functionality and/or modes. As not all the Mode Registers (MR*n*) have default values defined, contents of Mode Registers must be initialized and/or re-initialized, i.e. written, after power up and/or reset for proper operation. Also the contents of the Mode Registers can be altered by re-executing the MRS command during normal operation. When programming the mode registers, even if the user chooses to modify only a sub-set of the MRS fields, all address fields within the accessed mode register must be redefined when the MRS command is issued. MRS command and DLL Reset do not affect array contents, which means these commands can be executed any time after power-up without affecting the array contents. MRS Commands can be issued only when DRAM is at idle state. The mode register set command cycle time, t_{MRD} is required to complete the write operation to the mode register and is the minimum time required between two MRS commands shown in the t_{MRD} timing figure.

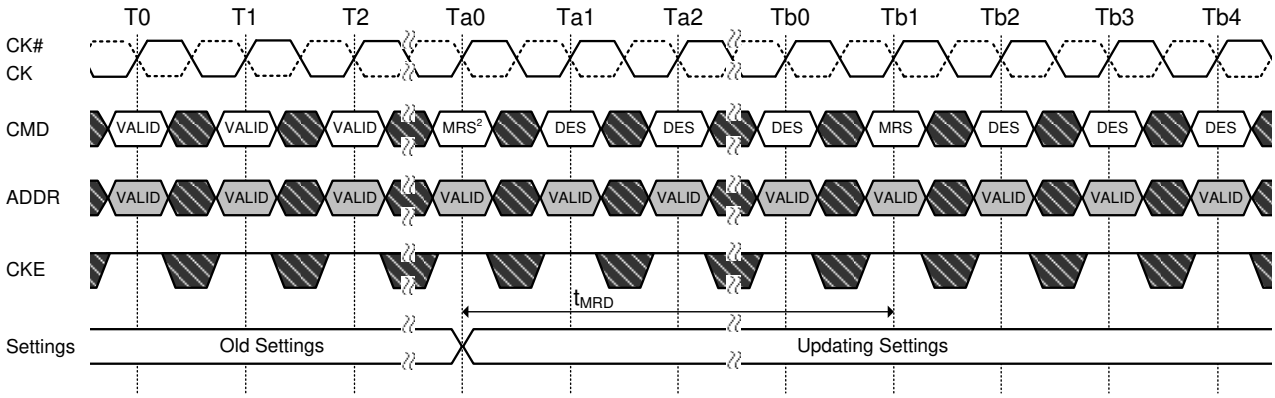

NOTE 1. This timing diagram shows C/A Parity Latency mode is "Disable" case.
NOTE 2. List of MRS commands exception that do not apply to t_{MRD}
- Gear down mode
- C/A Parity Latency mode
- CS to Command/Address Latency mode
- Per DRAM Addressability mode
- V_{REFDQ} training Value, V_{REFDQ} Training mode and V_{REFDQ} training Range.

TIME BREAK DON'T CARE

Figure 6. t_{MRD} timing

Some of the Mode Register setting affect to address/command/control input functionality. These case, next MRS command can be allowed when the function updating by current MRS command completed.

The MRS commands that do not apply t_{MRD} timing to next MRS command. These MRS command input cases have unique MR setting procedure, so refer to individual function description.

The most MRS command to Non-MRS command delay, t_{MOD}, is required for the DRAM to update the features, and is the minimum time required from an MRS command to a non-MRS command excluding DES, as shown in the t_{MOD} timing figure.

Some of the mode register setting cases, function updating takes longer than t_{MOD}. The MRS commands that do not apply t_{MOD} timing to next valid command excluding DES is listed in Note 2 of t_{MOD} timing figure. These MRS command input cases have unique MR setting procedure, so refer to individual function description.

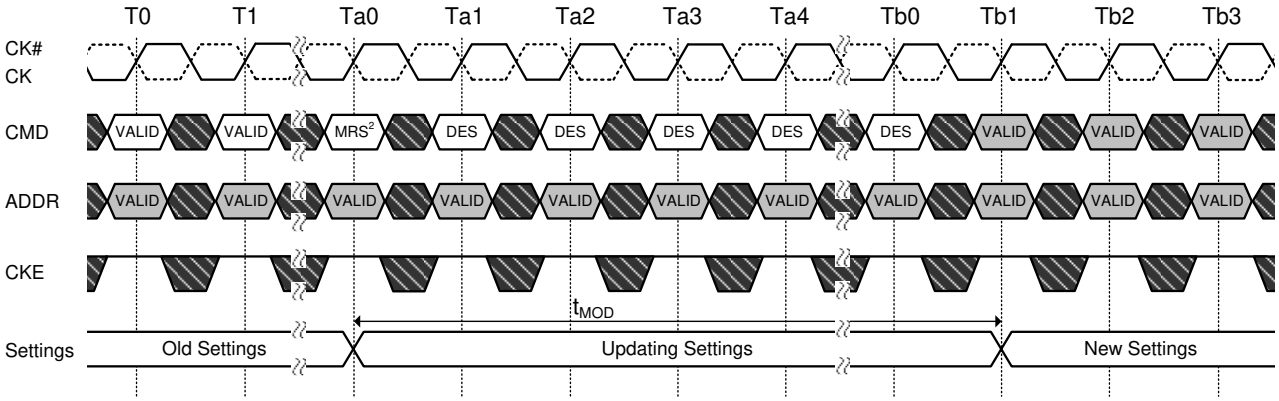

NOTE 1. This timing diagram shows C/A Parity Latency mode is "Disable" case.
NOTE 2. List of MRS commands exception that do not apply to t_{MOD}
- DLL Enable, DLL Reset
- V_{REFDQ} training Value, internal V_{REF} Monitor, V_{REFDQ} Training mode and V_{REFDQ} training Range
- Gear down mode
- Per DRAM addressability mode
- Maximum power saving mode
- CA Parity mode

TIME BREAK DON'T CARE

Figure 7. t_{MOD} timing

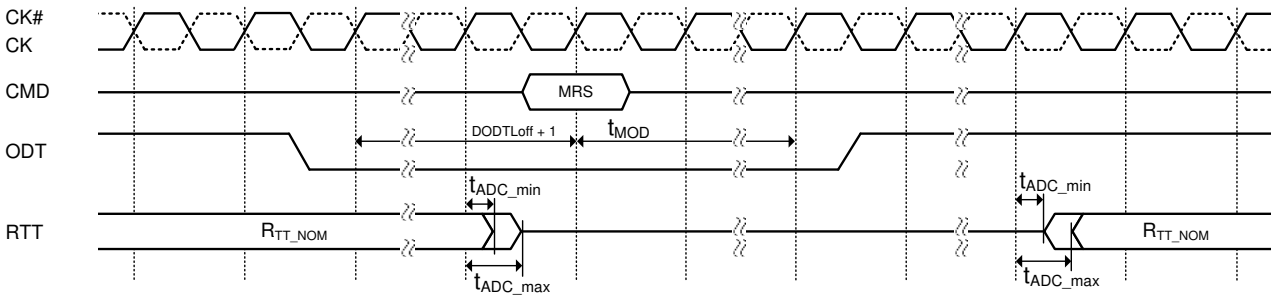

NOTE 1. This timing diagram shows C/A Parity Latency mode is "Disable" case.
NOTE 2. When an MRS command mentioned in this note affects R_{TT_NOM} turn on timings, R_{TT_NOM} turn off timings and R_{TT_NOM} value, this means the MR register value changes. The ODT signal should set to be low for at least DODTLoff +1 clock before their affecting MRS command is issued and remain low until t_{MOD} expires. The following MR registers affects R_{TT_NOM} turn on timings, R_{TT_NOM} turn off timings and R_{TT_NOM} value and it requires ODT to be low when an MRS command change the MR register value. If there are no change the MR register value that correspond to commands mentioned in this note, then ODT signal is not require to be low.
- DLL control for precharge power down
- Additive latency and CAS read latency
- DLL enable and disable
- CAS write latency
- CA Parity mode
- Gear down mode
- R_{TT_NOM}

Figure 8. ODT Status at MRS affecting ODT turn-on/off timing

The mode register contents can be changed using the same command and timing requirements during normal operation as long as the device is in idle state, i.e., all banks are in the precharged state with t_{RP} satisfied, all data bursts are completed and CKE is high prior to writing into the mode register. If R_{TT_NOM} function is intended to change (enable to disable and vice versa) or already enabled in DRAM MR, ODT signal must be registered Low ensuring R_{TT_NOM} is in an off state prior to MRS command affecting R_{TT_NOM} turn-on and off timing. The ODT signal may be registered high after t_{MOD} has expired. ODT signal is a don't care during MRS command if DRAM R_{TT_NOM} function is disabled in the mode register prior and after an MRS command.

Mode Register MR0

Table 7. MR0 Definition

BG1	BG0	BA1	BA0	RAS#/ A16	CAS#/ A15	WE#/ A14	A13	A12	A11	A10	A9	A8	A7	A6	A5	A4	A3	A2	A1	A0
0*1	0	0	0	0	0	0	0	0	WR & RTP*2,3			DLL Rst	TM	CL			BT	CL	BL	

A8	DLL Reset
0	No
1	Yes

A7	Test Mode
0	Normal

A3	Read Burst Type
0	Sequential
1	Interleave

A1	A0	BL
0	0	8 (Fixed)
0	1	BC4 or 8 (on the fly)
1	0	BC4 (Fixed)
1	1	Reserved

A11	A10	A9	WR	RTP
0	0	0	10	5
0	0	1	12	6
0	1	0	14	7
0	1	1	16	8
1	0	0	18	9
1	0	1	20	10
1	1	1	22	11

Write Recovery and Read to Precharge for auto precharge

A6	A5	A4	A2	CAS Latency
0	0	0	0	9
0	0	0	1	10
0	0	1	0	11
0	0	1	1	12
0	1	0	0	13
0	1	0	1	14
0	1	1	0	15
0	1	1	1	16
1	1	0	1	17
1	0	0	0	18
1	1	1	0	19
1	0	0	1	20
1	1	1	1	21
1	0	1	0	22

Note 1. Reserved for future use and must be programmed to 0 during MR.
Note 2. WR (write recovery for autoprecharge)min in clock cycles is calculated following rounding algorithm. The WR value in the mode register must be programmed to be equal or larger than WRmin. The programmed WR value is used with t_{RP} to determine t_{DAL}.
Note 3. The table shows the encodings for Write Recovery and internal Read command to Precharge command delay. For actual Write recovery timing, please refer to AC timing table.

CAS Latency

The CAS latency (CL) setting is defined in the MR0 Register Definition table. CAS latency is the delay, in clock cycles, between the internal read command and the availability of the first bit of output data. The device does not support half-clock latencies. The overall read latency (RL) is defined as additive latency (AL) + CAS latency (CL): RL = AL + CL.

Test Mode

The normal operating mode is selected by MR0[7] and all other bits set to the desired values shown in the MR0 Register Definition table. Programming MR0[7] to a value of 1 places the device into a DRAM manufacturer-defined test mode to be used only by the manufacturer, not by the end user. No operations or functionality is specified if MR0[7] = 1.

DLL Reset

The DLL reset bit is self-clearing, meaning that it returns to the value of 0 after the DLL reset function has been issued. After the DLL is enabled, a subsequent DLL reset should be applied. Any time the DLL reset function is used, t_{DLLK} must be met before functions requiring the DLL can be used. (For example, Read commands or ODT synchronous operations).

Burst Length, Type and Order

Accesses within a given burst may be programmed to sequential or interleaved order. The burst type is selected via bit A3 of Mode Register MR0. The ordering of accesses within a burst is determined by the burst length, burst type, and the starting column address as shown in the following table. The burst length is defined by bits A0-A1 of Mode Register MR0. Burst length options include fixed BC4, fixed BL8, and 'on the fly' which allows BC4 or BL8 to be selected coincident with the registration of a Read or Write command via A12/BC#.

Table 8. Burst Type and Burst Order

Burst Length	Read/Write	Starting Column Address			Burst type = Sequential (decimal) A3=0	burst type = Interleaved (decimal) A3=1	Note
		A2	A1	A0			
4 Chop	Read	0	0	0	0, 1, 2, 3, T, T, T, T	0, 1, 2, 3, T, T, T, T	1, 2, 3
		0	0	1	1, 2, 3, 0, T, T, T, T	1, 0, 3, 2, T, T, T, T	
		0	1	0	2, 3, 0, 1, T, T, T, T	2, 3, 0, 1, T, T, T, T	
		0	1	1	3, 0, 1, 2, T, T, T, T	3, 2, 1, 0, T, T, T, T	
		1	0	0	4, 5, 6, 7, T, T, T, T	4, 5, 6, 7, T, T, T, T	
		1	0	1	5, 6, 7, 4, T, T, T, T	5, 4, 7, 6, T, T, T, T	
		1	1	0	6, 7, 4, 5, T, T, T, T	6, 7, 4, 5, T, T, T, T	
		1	1	1	7, 4, 5, 6, T, T, T, T	7, 6, 5, 4, T, T, T, T	
	Write	0	V	V	0, 1, 2, 3, X, X, X, X	0, 1, 2, 3, X, X, X, X	1, 2, 4, 5
		1	V	V	4, 5, 6, 7, X, X, X, X	4, 5, 6, 7, X, X, X, X	
8	Read	0	0	0	0, 1, 2, 3, 4, 5, 6, 7	0, 1, 2, 3, 4, 5, 6, 7	2
		0	0	1	1, 2, 3, 0, 5, 6, 7, 4	1, 0, 3, 2, 5, 4, 7, 6	
		0	1	0	2, 3, 0, 1, 6, 7, 4, 5	2, 3, 0, 1, 6, 7, 4, 5	
		0	1	1	3, 0, 1, 2, 7, 4, 5, 6	3, 2, 1, 0, 7, 6, 5, 4	
		1	0	0	4, 5, 6, 7, 0, 1, 2, 3	4, 5, 6, 7, 0, 1, 2, 3	
		1	0	1	5, 6, 7, 4, 1, 2, 3, 0	5, 4, 7, 6, 1, 0, 3, 2	
		1	1	0	6, 7, 4, 5, 2, 3, 0, 1	6, 7, 4, 5, 2, 3, 0, 1	
		1	1	1	7, 4, 5, 6, 3, 0, 1, 2	7, 6, 5, 4, 3, 2, 1, 0	
	Write	V	V	V	0, 1, 2, 3, 4, 5, 6, 7	0, 1, 2, 3, 4, 5, 6, 7	2, 4

Notes:

1. In case of burst length being fixed to 4 by MR0 setting, the internal write operation starts two clock cycles earlier than for the BL8 mode. This means that the starting point for t_{WR} and t_{WTR} will be pulled in by two clocks. In case of burst length being selected on-the-fly via A12/BC#, the internal write operation starts at the same point in time like a burst of 8 write operation. This means that during on-the-fly control, the starting point for t_{WR} and t_{WTR} will not be pulled in by two clocks.
2. 0...7 bit number is value of CA[2:0] that causes this bit to be the first read during a burst.
3. T: Output driver for data and strobes are in high impedance.
4. V: a valid logic level (0 or 1), but respective buffer input ignores level on input pins.
5. X: Don't Care.

Write Recovery (WR)/Read-to-Precharge (RTP)

The programmed write recovery (WR) value is used for the auto precharge feature along with t_{RP} to determine t_{DAL}. WR for auto precharge (MIN) in clock cycles is calculated by dividing t_{WR} (in ns) by t_{CK} (in ns) and rounding to the next integer:

The WR value must be programmed to be equal to or larger than t_{WR} (MIN). When both DM and write CRC are enabled in the mode register, the device calculates CRC before sending the write data into the array; t_{WR} values will change when enabled. If there is a CRC error, the device blocks the Write operation and discards the data.

Internal Read-to-Precharge (RTP) command delay for auto precharge (MIN) in clock cycles is calculated by dividing t_{RTP} (in ns) by t_{CK} (in ns) and rounding to the next integer:

The RTP value in the mode register must be programmed to be equal to or larger than RTP (MIN). The programmed RTP value is used with t_{RP} to determine the ACT timing to the same bank.

Mode Register MR1

Table 9. MR1 Definition

BG1	BG0	BA1	BA0	RAS#/ A16	CAS#/ A15	WE#/ A14	A13	A12	A11	A10	A9	A8	A7	A6	A5	A4	A3	A2	A1	A0
0*1	0	0	1	0	0	0	0*1	Qoff*2	TDQS	R_{TT_NOM}			WL	0*1	0*1	AL		ODI		DLL

A12	Qoff
0	Output buffer enabled
1	Output buffer disabled

A7	Write Leveling Enable
0	Disable
1	Enable

A0	DLL Enable
0	Disable*3
1	Enable

A2	A1	Output Driver Impedance Control
0	0	RZQ/7
0	1	RZQ/5
1	0	Reserved
1	1	Reserved

A10	A9	A8	R_{TT_NOM}
0	0	0	R_{TT_NOM} Disable
0	0	1	RZQ/4
0	1	0	RZQ/2
0	1	1	RZQ/6
1	0	0	RZQ/1
1	0	1	RZQ/5
1	1	0	RZQ/3
1	1	1	RZQ/7

A11	TDQS
0	Disable
1	Enable

A4	A3	Additive Latency
0	0	0(AL disabled)
0	1	CL-1
1	0	CL-2
1	1	Reserved

Note 1. Reserved for future use and must be programmed to 0 during MRS.
Note 2. Outputs disabled - DQs, DQSs, DQS#s.
Note 3. States reversed to “0 as Disable” with respect to DDR4.

DLL Enable/DLL Disable

The DLL must be enabled for normal operation and is required during power-up initialization and upon returning to normal operation after having the DLL disabled. During normal operation (DLL enabled with MR1[0]) the DLL is automatically disabled when entering the Self Refresh operation and is automatically re-enabled upon exit of the Self Refresh operation. Any time the DLL is enabled and subsequently reset, t_{DLLK} clock cycles must occur before a Read or Synchronous ODT command can be issued to allow time for the internal clock to be synchronized with the external clock. Failing to wait for synchronization to occur may result in a violation of the t_{DQSCK}, t_{AON}, or t_{AOF} parameters.

During t_{DLLK}, CKE must continuously be registered High. The device does not require DLL for any Write operation, except when R_{TT_WR} is enabled and the DLL is required for proper ODT operation.

The direct ODT feature is not supported during DLL off mode. The ODT resistors must be disabled by continuously registering the ODT pin Low and/or by programming the R_{TT_NOM} bits MR1[10:8] = 000 via an MRS command during DLL off mode.

The dynamic ODT feature is not supported in DLL off mode; to disable dynamic ODT externally, use the MRS command to set R_{TT_WR}, MR2[11:9] = 00.

Output Driver Impedance Control

The output driver impedance of the device is selected by MR1[2:1].

ODT R_{TT_NOM} Values

The device is capable of providing three different termination values: R_{TT_PARK}, R_{TT_NOM}, and R_{TT_WR}. The nominal termination value, R_{TT_NOM}, is programmed in MR1. A separate value, R_{TT_WR}, may be programmed in MR2 to enable a unique R_{TT} value when ODT is enabled during Write operations. The R_{TT_WR} value can be applied during Write commands even when R_{TT_NOM} is disabled. A third R_{TT} value, R_{TT_PARK}, is programmed in MR5. R_{TT_PARK} provides a termination value when the ODT signal is Low.

Additive Latency

The Additive Latency (AL) operation is supported to make command and data bus efficient for sustainable bandwidths in the device. In this operation, the device allows a Read or Write command (either with or without auto precharge) to be issued immediately after the Activate command. The command is held for the time of AL before it is issued inside the device. Read latency (RL) is controlled by the sum of the AL and CAS latency (CL) register settings. Write latency (WL) is controlled by the sum of the AL and CAS Write latency (CWL) register settings. Additive Latency is not supported for x16 device.

Write Leveling

For better signal integrity, the device uses fly-by topology for the commands, addresses, control signals, and clocks. Fly-by topology benefits from a reduced number of stubs and their lengths, but it causes flight-time skew between clock and strobe at every DRAM on the DIMM. This makes it difficult for the controller to maintain tDQSS, tDSS, and tDSH specifications. Therefore, the device supports a write leveling feature that allows the controller to compensate for skew.

Output Disable

The device outputs may be enabled/disabled by MR1[12] as shown in the MR1 Register Definition table. When MR1[12] is enabled (MR1[12] = 1) all output pins (such as DQ and DQS) are disconnected from the device, which removes any loading of the output drivers. For example, this feature may be useful when measuring module power. For normal operation, set MR1[12] to 0.

Termination Data Strobe

Termination data strobe (TDQS) is a feature of the x8 device and provides additional termination resistance outputs that may be useful in some system configurations. The TDQS, DBI, and Data Mask (DM) functions share the same pin. When the TDQS function is enabled via the mode register, the DM and DBI functions are not supported. When the TDQS function is disabled, the DM and DBI functions can be enabled separately.

Mode Register MR2

Table 10. MR2 Definition

BG0	BG1	BA1	BA0	RAS#/ A16	CAS#/ A15	WE#/ A14	A13	A12	A11	A10	A9	A8	A7	A6	A5	A4	A3	A2	A1	A0
0*1	0	1	0	0	0	0	0*1	Write CRC	R_{TT_WR}			0*1	LPASR		CWL			0*1	0*1	0*1

A12	Write CRC
0	Disable
1	Enable

A11	A10	A9	R_{TT_WR}
0	0	0	$R_{TT(WR)}$ disabled (Write does not affect R_{TT} value)
0	0	1	RZQ/2
0	1	0	RZQ/1
0	1	1	Hi-Z
1	0	0	RZQ/3

A5	A4	A3	CWL	Operating Data Rate in MT/s for 1 t_{CK} Write Preamble		Operating Data Rate in MT/s for 2 t_{CK} Write Preamble*2	
				1st Set	2nd Set	1st Set	2nd Set
0	0	0	9	1600	-	-	-
0	0	1	10	1866	-	-	-
0	1	0	11	2133	1600	-	-
0	1	1	12	2400	1866	-	-
1	0	0	14	2666	2133	2400	-
1	0	1	16	2933/3200	2400	2666	2400
1	1	0	18	-	2666	2933/3200	2666
1	1	1	20	-	2933/3200	-	2933/3200

A7	A6	Low Power Auto Self Refresh (LPASR)
0	0	Manual Mode - Normal Operating Temperature Range (T_C: -40°C ~ 85°C)
0	1	Manual Mode - Reduced Operating Temperature Range (T_C: -40°C ~ 45°C)
1	0	Manual Mode - Extended Operating Temperature Range (T_C: -40°C ~ 95°C)
1	1	ASR Mode (Auto Self Refresh)

Note 1. Reserved for future use and must be programmed to 0 during MRS.
Note 2. The 2 t_{CK} Write Preamble is valid for DDR4-2400/2666/2933/3200 Speed Grade. For the 2nd Set of 2t_{CK} Write Preamble, no additional CWL is needed.

CAS Write Latency

CAS WRITE latency (CWL) is defined by MR2[5:3] as shown in the MR2 Register Definition table. CWL is the delay, in clock cycles, between the internal Write command and the availability of the first bit of input data. The device does not support any half-clock latencies. The overall Write latency (WL) is defined as additive latency (AL) + parity latency (PL) + CAS write latency (CWL): WL = AL +PL + CWL.

Low-Power Auto Self Refresh

Low-power auto self refresh (LPASR) is supported in the device. Applications requiring Self Refresh operation over different temperature ranges can use this feature to optimize the IDD6 current for a given temperature range as specified in the MR2 Register Definition table.

Dynamic ODT

In certain applications and to further enhance signal integrity on the data bus, it is desirable to change the termination strength of the device without issuing an MRS command. This may be done by configuring the dynamic ODT (R_{TT_WR}) settings in MR2[11:9]. In write leveling mode, only R_{TT_NOM} is available.

Write Cyclic Redundancy Check Data Bus

The write cyclic redundancy check (CRC) data bus feature during writes has been added to the device. When enabled via the mode register, the data transfer size goes from the normal 8-bit (BL8) frame to a larger 10-bit UI frame, and the extra two UIs are used for the CRC information.

Mode Register MR3

Table 11. MR3 Definition

BG1	BG0	BA1	BA0	RAS#/ A16	CAS#/ A15	WE#/ A14	A13	A12	A11	A10	A9	A8	A7	A6	A5	A4	A3	A2	A1	A0
0*1	0	1	1	0	0	0	0*1	MPR Read Format		Write CMD Latency		Fine Granularity Refresh Mode			TS	PDA	Gear Down	MPR	MPR Page Selection*3	

A12	A11	MPR Read Format
0	0	Serial
0	1	Parallel
1	0	Staggered
1	1	Reserved

A10	A9	CRC+DM Write Command Latency*2
0	0	4 t_{CK} (1600)
0	1	5 t_{CK} (1866/2133/2400/2666)
1	0	6 t_{CK} (2933/3200)
1	1	Reserved

A1	A0	MPR Page Selection
0	0	Page0
0	1	Page1
1	0	Page2
1	1	Page3

A3	Geardown Mode
0	1/2 Rate
1	1/4 Rate

A8	A7	A6	Fine Granularity Refresh
0	0	0	Normal (Fixed 1x)
0	0	1	Fixed 2x
0	1	0	Fixed 4x
0	1	1	Reserved
1	0	0	Reserved
1	0	1	Enable on the fly 2x
1	1	0	Enable on the fly 4x
1	1	1	Reserved

A4	Per DRAM Addressability
0	Disable
1	Enable

A2	MPR Operation
0	Normal
1	Dataflow from/to MPR

A5	Temperature sensor
0	Disable
1	Enable

Note 1. Reserved for future use and must be programmed to 0 during MRS.
Note 2. Write Command latency when CRC and DM are both enabled:
- At less than or equal to 1600 then $4t_{CK}$; neither $5t_{CK}$ nor $6t_{CK}$
- At greater than 1600 and less than or equal to 2666 then $5t_{CK}$; neither $4t_{CK}$ nor $6t_{CK}$
- At greater than 2666 and less than or equal to 3200 then $6t_{CK}$; neither $4t_{CK}$ nor $5t_{CK}$

Note 3. Refer to MPR Data Format table.

Write Command Latency When CRC/DM is Enabled

The Write command latency (WCL) must be set when both Write CRC and DM are enabled for Write CRC persistent mode. This provides the extra time required when completing a Write burst when Write CRC and DM are enabled.

Fine Granularity Refresh Mode

This mode had been added to DDR4 to help combat the performance penalty due to refresh lockout at high densities. Shortening t_{RFC} and decreasing cycle time allows more accesses to the chip and allows for increased scheduling flexibility.

Temperature Sensor Status

This mode directs the DRAM to update the temperature sensor status at MPR Page 2, MPR0 [4,3]. The temperature sensor setting should be updated within 32ms; when an MPR read of the temperature sensor status bits occurs, the temperature sensor status should be no older than 32ms.

Per-DRAM Addressability

The MRS command mask allows programmability of a given device that may be in the same rank (devices sharing the same command and address signals). As an example, this feature can be used to program different ODT or V_{REF} values on DRAM devices within a given rank.

Gear-Down Mode

The device defaults in 1/2 rate (1N) clock mode and uses a low frequency MRS command followed by a sync pulse to align the proper clock edge for operating the control lines CS#, CKE, and ODT when in 1/4 rate (2N) mode. For operation in 1/2 rate mode, no MRS command or sync pulse is required.

Mode Register MR4

Table 12. MR4 Definition

BG1	BG0	BA1	BA0	RAS#/ A16	CAS#/ A15	WE#/ A14	A13	A12	A11	A10	A9	A8	A7	A6	A5	A4	A3	A2	A1	A0
0*1	1	0	0	0	0	0	hPPR	t_{WPRE}	t_{RPRE}	t_{RPRE} training	SRF abort	CS# to CMD/ADDR Latency Mode			sPPR	Internal V_{REF}	TCRM	TCRR	MPSM	0*1

A13	hPPR
0	Disable
1	Enable

A10	Read Preamble Training Mode
0	Disable
1	Enable

A11	Read Preamble
0	1 t_{CK}
1	2 t_{CK}

A12	Write Preamble
0	1 t_{CK}
1	2 t_{CK}

A8	A7	A6	CAL
0	0	0	Disabled
0	0	1	3
0	1	0	4
0	1	1	5
1	0	0	6
1	0	1	8
1	1	0	Reserved
1	1	1	Reserved

A4	Internal V_{REF} Monitor
0	Disable
1	Enable

A2	Temperature Controlled Refresh Range
0	Normal
1	Extended

A3	Temperature Controlled Refresh Mode
0	Disable
1	Enable

A1	Maximum Power Saving Mode
0	Disable
1	Enable

A9	Self Refresh Abort
0	Disable
1	Enable

A5	sPPR
0	Disable
1	Enable

Note 1. Reserved for future use and must be programmed to 0 during MRS.

Write Preamble

Programmable Write preamble, t_{WPRE}, can be set to $1t_{CK}$ or $2t_{CK}$ via the MR4 register. The $1t_{CK}$ setting is similar to DDR3. However, when operating in $2t_{CK}$ Write preamble mode, CWL must be programmed to a value at least 1 clock greater than the lowest CWL setting supported in the applicable t_{CK} range. Some even settings will require addition of 2 clocks. If the alternate longer CWL was used, the additional clocks will not be required.

Read Preamble

Programmable Read preamble t_{RPRE} can be set to $1t_{CK}$ or $2t_{CK}$ via the MR4 register. Both the $1t_{CK}$ and $2t_{CK}$ DDR4 preamble settings are different from that defined for the DDR3 SDRAM. Both DDR4 Read preamble settings may require the memory controller to train (or read level) its data strobe receivers using the Read preamble training.

Read Preamble Training

Programmable Read preamble training can be set to $1t_{CK}$ or $2t_{CK}$. This mode can be used by the memory controller to train or Read level its data strobe receivers.

Temperature-Controlled Refresh

When temperature-controlled refresh mode is enabled, the device may adjust the internal refresh period to be longer than t_{REFI} of the normal temperature range by skipping external Refresh commands with the proper gear ratio. For example, the DRAM temperature sensor detected less than 45°C. Normal temperature mode covers the range of -40°C to 85°C, while the extended temperature range covers -40°C to 95°C.

Command Address Latency

Command Address Latency (CAL) is a power savings feature and can be enabled or disabled via the MRS setting. CAL is defined as the delay in clock cycles (t_{CAL}) between a CS# registered LOW and its corresponding registered command and address. The value of CAL (in clocks) must be programmed into the mode register and is based on the roundup (in clocks) of [t_{CK}(ns)/t_{CAL}(ns)].

Internal VREF Monitor

The device generates its own internal V_{REFDQ}. This mode may be enabled during V_{REFDQ} training, and when enabled, $V_{REF, time\text{-}short}$ and $V_{REF, time\text{-}long}$ need to be increased by 10ns if DQ0, DQ1, DQ2, or DQ3 have 0pF loading. An additional 15ns per pF of loading is also needed.

Maximum Power Savings Mode

This mode provides the lowest power mode where data retention is not required. When the device is in the maximum power saving mode, it does not need to guarantee data retention or respond to any external command (except the maximum power saving mode exit command and during the assertion of Reset# signal LOW).

Mode Register MR5

Table 13. MR5 Definition

BG1	BG0	BA1	BA0	RAS#/ A16	CAS#/ A15	WE#/ A14	A13	A12	A11	A10	A9	A8	A7	A6	A5	A4	A3	A2	A1	A0
0*1	1	0	1	0	0	0	0*1	RDBI	WDBI	DM	CAPE	R_{TT_PARK}			ODT IB for PD	Parity Error	CRC error	C/A Parity Latency		

A9	CA parity Persistent Error
0	Disable
1	Enable

A10	Data Mask
0	Disable
1	Enable

A11	Write DBI
0	Disable
1	Enable

A12	Read DBI
0	Disable
1	Enable

A8	A7	A6	R_{TT_PARK}
0	0	0	R_{TT_PARK} Disabled
0	0	1	RZQ/4
0	1	0	RZQ/2
0	1	1	RZQ/6
1	0	0	RZQ/1
1	0	1	RZQ/5
1	1	0	RZQ/3
1	1	1	RZQ/7

A2	A1	A0	PL
0	0	0	Disabled
0	0	1	4 (1600/1866/2133)
0	1	0	5 (2400/2666)
0	1	1	6 (2933/3200)
1	0	0	Reserved
1	0	1	Reserved
1	1	0	Reserved
1	1	1	Reserved

A5	ODT Input Buffer during Power Down*2
0	ODT input buffer is activated
1	ODT input buffer is deactivated

A4	C/A Parity Error Status
0	Clear
1	Error

A3	CRC Error Clear
0	Clear
1	Error

Note 1. Reserved for future use and must be programmed to 0 during MRS.
Note 2. When R_{TT_NOM} Disable is set in MR1, A5 of MR5 will be ignored.

Data Bus Inversion

The Data Bus Inversion (DBI) function has been added to the device and is supported for x8 configurations. The DBI function shares a common pin with the DM and TDQS (x8) functions. The DBI function applies to both Read and Write operations; Write DBI cannot be enabled at the same time the DM function is enabled. Refer to the TDQS Function Matrix table for valid configurations for all three functions (TDQS/DM/DBI). DBI is not allowed during MPR Read operation; during an MPR read, the DRAM ignores the read DBI enable setting in MR5 bit A12.

Data Mask

The Data Mask (DM) function, also described as a partial write, has been added to the device and is supported for x8 configurations. The DM function shares a common pin with the DBI and TDQS functions. The DM function applies only to Write operations and cannot be enabled at the same time the write DBI function is enabled. Refer to the TDQS Function Matrix table for valid configurations for all three functions (TDQS/DM/DBI).

CA Parity Persistent Error Mode

Normal CA parity mode (CA parity persistent mode disabled) no longer performs CA parity checking while the parity error status bit remains set at 1. However, with CA parity persistent mode enabled, CA parity checking continues to be performed when the parity error status bit is set to a 1.

ODT Input Buffer for Power-Down

This feature determines whether the ODT input buffer is on or off during power-down. If the input buffer is configured to be on (enabled during power-down), the ODT input signal must be at a valid logic level. If the input buffer is configured to be off (disabled during power-down), the ODT input signal may be floating and the device does not provide R_{TT_NOM} termination. However, the device may provide R_{TT_PARK} termination depending on the MR settings. This is primarily for additional power savings.

CA Parity Error Status

The device will set the error status bit to 1 upon detecting a parity error. The parity error status bit remains set at 1 until the device controller clears it explicitly using an MRS command.

CRC Error Clear

The device will set the error status bit to 1 upon detecting a CRC error. The CRC error status bit remains set at 1 until the device controller clears it explicitly using an MRS command.

CA Parity Latency Mode

CA parity is enabled when a latency value, dependent on t_{CK}, is programmed; this accounts for parity calculation delay internal to the device. The normal state of CA parity is to be disabled. If CA parity is enabled, the device must ensure there are no parity errors before executing the command. CA parity signal (PAR) covers ACT#, RAS#/A16, CAS#/A15, WE#/A14, and the address bus including bank address and bank group bits. The control signals CKE, ODT, and CS# are not included in the parity calculation.

Mode Register MR6

Table 14. MR6 Definition

BG1	BG0	BA1	BA0	RAS#/ A16	CAS#/ A15	WE#/ A14	A13	A12	A11	A10	A9	A8	A7	A6	A5	A4	A3	A2	A1	A0
0*1	1	1	0	0	0	0	0*1	t_{CCD_L}			0*1	0*1	V_{REFDQ} Training	V_{REFDQ} Range	V_{REFDQ} Training Value					

A12	A11	A10	$t_{CCD_L.min}$ (t_{CK})	$t_{DLLK.min}$ (t_{CK})	Note
0	0	0	4	597	Data rate ≦1333Mbps
0	0	1	5	597	1333Mbps < Data rate ≦1866Mbps
0	1	0	6	768	1866Mbps < Data rate ≦2400Mbps
0	1	1	7	1024	2400Mbps < Data rate ≦2666Mbps
1	0	0	8	1024	2666Mbps < Data rate ≦3200Mbps
1	0	1	Reserved	-	Reserved
1	1	0	Reserved	-	Reserved
1	1	1	Reserved	-	Reserved

A6	V_{REFDQ} Range
0	Range 1
1	Range 2

A7	V_{REFD} Training
0	Disable
1	Enable

A5:A0	Range1	Range2	A5:A0	Range1	Range2	A5:A0	Range1	Range2	A5:A0	Range1	Range2
000000	60.00%	45.00%	001101	68.45%	53.45%	01 1010	76.90%	61.90%	10 0111	85.35%	70.35%
000001	60.65%	45.65%	001110	69.10%	54.10%	01 1011	77.55%	62.55%	10 1000	86.00%	71.00%
000010	61.30%	46.30%	001111	69.75%	54.75%	01 1100	78.20%	63.20%	10 1001	86.65%	71.65%
000011	61.95%	46.95%	010000	70.40%	55.40%	01 1101	78.85%	63.85%	10 1010	87.30%	72.30%
000100	62.60%	47.60%	010001	71.05%	56.05%	01 1110	79.50%	64.50%	10 1011	87.95%	72.95%
000101	63.25%	48.25%	010010	71.70%	56.70%	01 1111	80.15%	65.15%	10 1100	88.60%	73.60%
000110	63.90%	48.90%	010011	72.35%	57.35%	10 0000	80.80%	65.80%	10 1101	89.25%	74.25%
000111	64.55%	49.55%	010100	73.00%	58.00%	10 0001	81.45%	66.45%	10 1110	89.90%	74.90%
001000	65.20%	50.20%	010101	73.65%	58.65%	10 0010	82.10%	67.10%	10 1111	90.55%	75.55%
001001	65.85%	50.85%	010110	74.30%	59.30%	10 0011	82.75%	67.75%	11 0000	91.20%	76.20%
001010	66.50%	51.50%	010111	74.95%	59.95%	10 0100	83.40%	68.40%	11 0001	91.85%	76.85%
001011	67.15%	52.15%	011000	75.60%	60.60%	10 0101	84.05%	69.05%	11 0010	92.50%	77.50%
001100	67.80%	52.80%	011001	76.25%	61.25%	10 0110	84.70%	69.70%	11 0011 to 111111 : Reserved		

Note 1. Reserved for future use and must be programmed to 0 during MRS.

t_{CCD_L} Programming

The device controller must program the correct tCCD_L value. tCCD_L will be programmed according to the value defined per operating frequency in the AC parameter table.

V_{REFDQ} Training Enable

V_{REFDQ} Training is where the device internally generates its own V_{REFDQ} to be used by the DQ input receivers. The device controller is responsible for setting and calibrating the internal V_{REFDQ} level using an MRS protocol (adjust up, adjust down, etc.). The procedure is a series of Writes and Reads in conduction with V_{REFDQ} adjustments to optimize and verify the data eye. Enabling V_{REFDQ} Training must be used whenever values are being written to the MR6[6:0] register.

V_{REFDQ} Training Range

The device defines two V_{REFDQ} calibration ranges: Range 1 and Range 2. Range 1 supports V_{REFDQ} between 60% and 92% of V_{DDQ} while Range 2 supports V_{REFDQ} between 45% and 77% of V_{DDQ}, Range 1 was targeted for module-based designs and Range 2 was added to target point to-point designs.

V_{REFDQ} Training Value

Fifty settings provide approximately 0.65% of granularity steps sizes for both Range 1 and Range 2 of V_{REFDQ}.

Mode Register MR7: Ignore

The DDR4 SDRAM shall ignore any access to MR7 for all DDR4 SDRAM. Any bit setting within MR7 may not take any effect in the DDR4 SDRAM.

DLL-off Mode and DLL on/off Switching Procedure

DLL on/off switching procedure

The DLL-off mode is entered by setting MR1 bit A0 to “0”; this will disable the DLL for subsequent operations until A0 bit is set back to “1”.

DLL “on” to DLL “off” Procedure

To switch from DLL “on” to DLL “off” requires the frequency to be changed during Self-Refresh, as outlined in the following procedure:

1. Starting from Idle state (All banks pre-charged, all timings fulfilled, and DRAMs On-die Termination resistors, R_{TT_NOM}, must be in high impedance state before MRS to MR1 to disable the DLL.)
2. Set MR1 bit A0 to “0” to disable the DLL.
3. Wait t_{MOD}.
4. Enter Self Refresh Mode; wait until (t_{CKSRE}) is satisfied.
5. Change frequency, following the guidelines in the Input Clock Frequency Change section.
6. Wait until a stable clock is available for at least (t_{CKSRX}) at device inputs.
7. Starting with the Self Refresh Exit command, CKE must continuously be registered high until all t_{MOD} timings from any MRS command are satisfied. In addition, if any ODT features were enabled in the mode registers when Self Refresh mode was entered, the ODT signal must continuously be registered LOW until all t_{MOD} timings from any MRS command are satisfied. If R_{TT_NOM} features were disabled in the mode registers when Self Refresh mode was entered, ODT signal is Don’t Care.
8. Wait t_{XS_Fast} or t_{XS_Abort} or t_{XS}, then set Mode Registers with appropriate values (especially an update of CL, CWL and WR may be necessary; a ZQCL command may also be issued after t_{XS_Fast}).
   - t_{XS_Fast} : ZQCL, ZQCS, MRS commands. For MRS command, only CL and WR/RTP register in MR0, CWL register in MR2 and geardown mode in MR3 are allowed to be accessed provided the device is not in per DRAM addressibility mode. Access to other device mode registers must satisfy t_{XS} timing.
   - t_{XS_Abort} : If the MR4 bit A9 is enabled then the device aborts any ongoing refresh and does not increment the refresh counter. The controller can issue a valid command after a delay of t_{XS_Abort}. Upon exit from Self-Refresh, the device requires a minimum of one extra refresh command before it is put back into Self-Refresh Mode. This requirement remains the same irrespective of the setting of the MRS bit for self refresh abort.
   - t_{XS} : ACT, PRE, PREA, REF, SRE, PDE, WR, WRS4, WRS8, WRA, WRAS4, WRAS8, RD, RDS4, RDS8, RDA, RDAS4, RDAS8
9. Wait for t_{MOD}, then device is ready for next command.

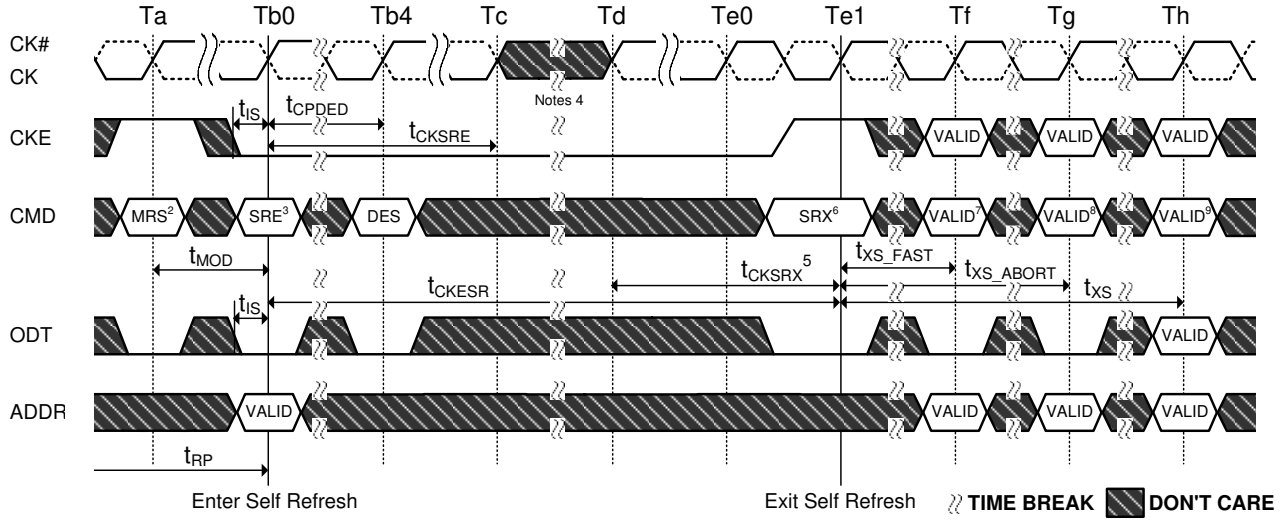

NOTES:
1. Starting with Idle State, R_{TT} in Stable
2. Disable DLL by setting MR1 Bit A0 to 0
3. Enter SR
4. Change Frequency
5. Clock must be stable t_{CKSRX}
6. Exit SR
7.8.9. Update Mode registers allowed with DLL off parameters setting

Figure 9. DLL Switch Sequence from DLL ON to DLL OFF

DLL "off" to DLL "on" Procedure

To switch from DLL "off" to DLL "on" (with required frequency change) during Self-Refresh:

1. Starting from Idle state (All banks pre-charged, all timings fulfilled and DRAMs On-die Termination resistors (R_{TT_NOM}) must be in high impedance state before Self-Refresh mode is entered.)
2. Enter Self Refresh Mode, wait until t_{CKSRE} satisfied.
3. Change frequency, following the guidelines in the Input Clock Frequency Change section.
4. Wait until a stable clock is available for at least (t_{CKSRX}) at device inputs.
5. Starting with the Self Refresh Exit command, CKE must continuously be registered high until t_{DLLK} timing from subsequent DLL Reset command is satisfied. In addition, if any ODT features were enabled in the mode registers when Self Refresh mode was entered, the ODT signal must continuously be registered low until t_{DLLK} timings from subsequent DLL Reset command is satisfied. If R_{TT_NOM} were disabled in the mode registers when Self Refresh mode was entered, ODT signal is don't care.
6. Wait t_{XS} or t_{XS_ABORT} depending on Bit A9 in MR4, then set MR1 bit A0 to "1" to enable the DLL.
7. Wait t_{MRD}, then set MR0 bit A8 to "1" to start DLL Reset.
8. Wait t_{MRD}, then set Mode Registers with appropriate values (especially an update of CL, CWL and WR may be necessary. After t_{MOD} satisfied from any proceeding MRS command, a ZQCL command may also be issued during or after t_{DLLK}.)
9. Wait for t_{MOD}, then device is ready for next command. (Remember to wait t_{DLLK} after DLL Reset before applying command requiring a locked DLL). In addition, wait also for t_{ZQoper} in case a ZQCL command was issued.

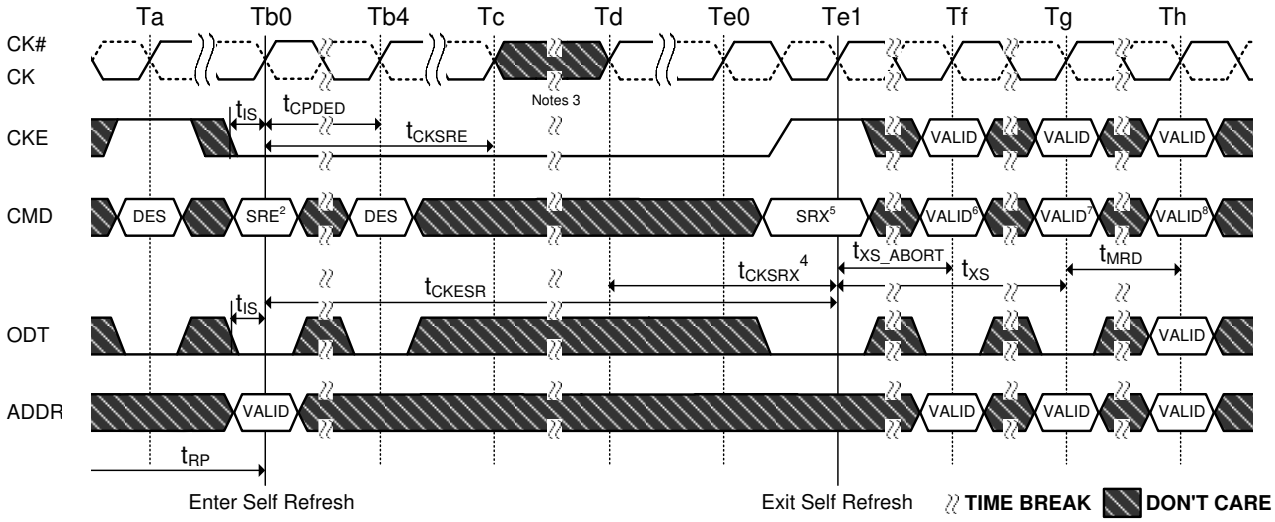

NOTES:
1. Starting with Idle State
2. Enter SR
3. Change Frequency
4. Clock must be stable t_{CKSRX}
5. Exit SR
6.7. Set DLL-on by MR1 A0= '1'
8. Start DLLReset
9. Update rest MR register values after t_{DLLK} (not shown in the diagram)

Figure 10. DLL Switch Sequence from DLL OFF to DLL ON

DLL-off Mode

DLL-off mode is entered by setting MR1 bit A0 to “0”; this will disable the DLL for subsequent operations until A0 bit is set back to “1”. The MR1 A0 bit for DLL control can be switched either during initialization or during self refresh mode. Refer to the Input Clock Frequency Change section for more details.

The maximum clock frequency for DLL-off Mode is specified by the parameter t_{CKDLL_OFF}. There is no minimum frequency limit besides the need to satisfy the refresh interval, t_{REFI}.

Due to latency counter and timing restrictions, only one value of CAS Latency (CL) in MR0 and CAS Write Latency (CWL) in MR2 are supported. The DLL-off mode is only required to support setting of both CL=10 and CWL=9.

DLL-off mode will affect the Read data Clock to Data Strobe relationship (t_{DQSCK}), but not the Data Strobe to Data relationship (t_{DQSQ}, t_{QH}). Special attention is needed to line up Read data to controller time domain.

Comparing with DLL-on mode, where t_{DQSCK} starts from the rising clock edge (AL+CL) cycles after the Read command, the DLL-off mode t_{DQSCK} starts (AL+CL - 1) cycles after the read command. Another difference is that t_{DQSCK} may not be small compared to t_{CK} (it might even be larger than t_{CK}) and the difference between $t_{DQSCKmin}$ and $t_{DQSCKmax}$ is significantly larger than in DLL-on mode. $t_{DQSCK(DLL_off)}$ values are undefined.

The timing relations on DLL-off mode Read operation are shown in the following diagram, where CL = 10, AL = 0, and BL = 8.

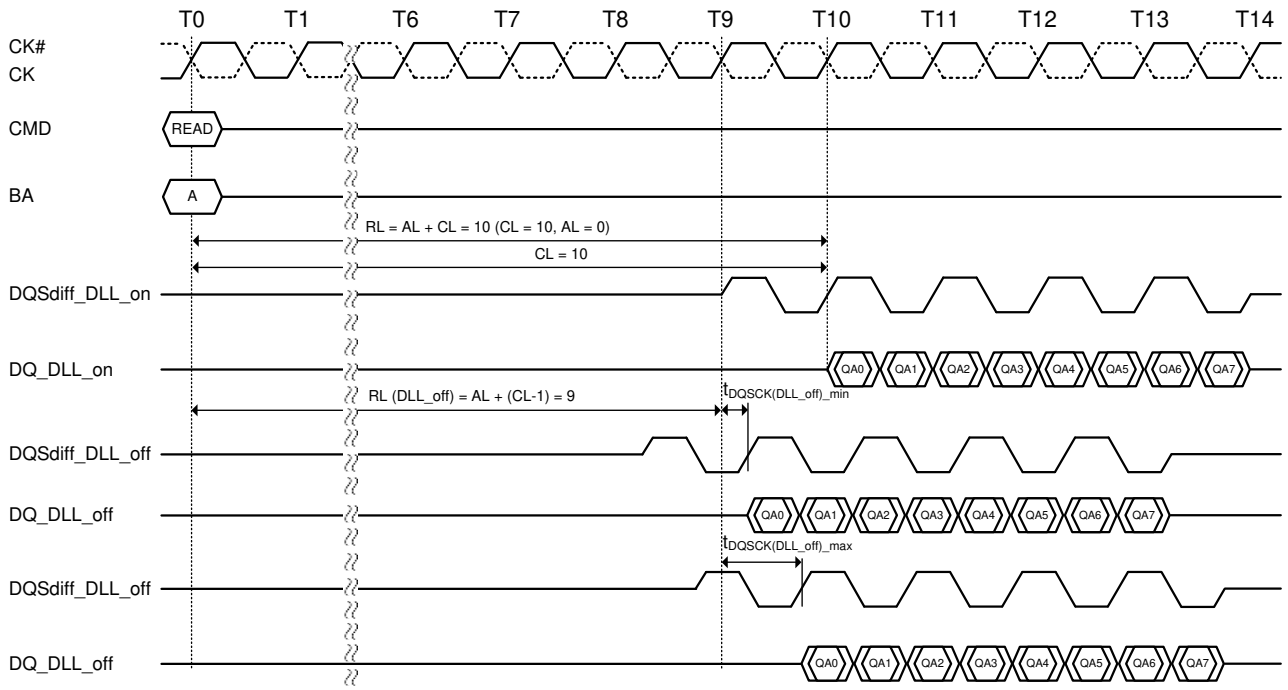

Figure 11. Read operation at DLL-off mode

Input Clock Frequency Change

After the device is initialized, the DDR4 SDRAM requires the clock to be “stable” during almost all states of normal operation. This means that after the clock frequency has been set and is to be in the “stable state”, the clock period is not allowed to deviate except for what is allowed for by the clock jitter and SSC (spread spectrum clocking) specifications. The input clock frequency can be changed from one stable clock rate to another stable clock rate only when in Self- Refresh mode. Outside Self-Refresh mode, it is illegal to change the clock frequency.

After the device has been successfully placed into Self-Refresh mode and t_{CKSRE} has been satisfied, the state of the clock becomes a "Don’t Care". Following a "Don’t Care", changing the clock frequency is permissible, provided the new clock frequency is stable prior to t_{CKSRX}. When entering and exiting Self-Refresh mode for the sole purpose of changing the clock frequency, the Self-Refresh entry and exit specifications must still be met as outlined in Self-Refresh Operation.

For the new clock frequency, additional MRS commands to MR0, MR2, MR3, MR4, MR5, and MR6 may need to be issued to program appropriate CL, CWL, Gear-down mode, Read & Write Preamble, Command Address Latency (CAL Mode), Command Address Parity (CA Parity Mode), and t_{CCD_L}/t_{DLLK} value.

In particular, the Command Address Parity Latency (PL) must be disabled when the clock rate changes, ie. while in Self Refresh Mode. For example, if changing the clock rate from DDR4-2133 to DDR4-2933 with CA Parity Mode enabled, MR5[2:0] must first change from PL = 4 to PL = disable prior to PL = 6. A correct procedure would be to (1) change PL = 4 to disable via MR5 [2:0], (2) enter Self Refresh Mode, (3) change clock rate from DDR4-2133 to DDR4-2933, (4) exit Self Refresh Mode, (5) Enable CA Parity Mode setting PL = 6 via MR5 [2:0].

If the MR settings that require additional clocks are updated after the clock rate has been increased, i.e. after exiting self refresh mode, the required MR settings must be updated prior to removing the DRAM from the idle state, unless the DRAM is reset. If the DRAM leaves the idle state to enter self refresh mode or ZQ Calibration, the updating of the required MR settings may be deferred to after the next time the DRAM enters the idle state.

If MR6 is issued prior to Self Refresh Entry for new t_{DLLK} value, then DLL will relock automatically at Self Refresh Exit. However, if MR6 is issued after Self Refresh Entry, then MR0 must be issued to reset the DLL.

The device input clock frequency can change only within the minimum and maximum operating frequency specified for the particular speed grade. Any frequency change below the minimum operating frequency would require the use of DLL-on mode to DLL-off mode transition sequence. (See DLL on/off switching procedure)

Write Leveling

For better signal integrity, the DDR4 memory module adopted fly-by topology for the commands, addresses, control signals, and clocks. The fly-by topology has benefits from reducing number of stubs and their length, but it also causes flight time skew between clock and strobe at every DRAM on the DIMM. This makes it difficult for the Controller to maintain t_{DQSS}, t_{DSS}, and t_{DSH} specification. Therefore, the device supports a write leveling feature to allow the controller to compensate for skew. This feature may not be required under some system conditions provided the host can maintain the t_{DQSS}, t_{DSS} and t_{DSH} specifications.

The memory controller can use the write leveling feature and feedback from the device to adjust the DQS, DQS# to CK, CK# relationship. The memory controller involved in the leveling must have adjustable delay setting on DQS, DQS# to align the rising edge of DQS, DQS# with that of the clock at the DRAM pin. The DRAM asynchronously feeds back CK, CK#, sampled with the rising edge of DQS, DQS#, through the DQ bus. The controller repeatedly delays DQS, DQS# until a transition from 0 to 1 is detected. The DQS, DQS# delay established through this exercise would ensure t_{DQSS} specification.

Besides t_{DQSS}, t_{DSS} and t_{DSH} specification also needs to be fulfilled. One way to achieve this is to combine the actual t_{DQSS} in the application with an appropriate duty cycle and jitter on the DQS, DQS# signals. Depending on the actual t_{DQSS} in the application, the actual values for t_{DQSL} and t_{DQSH} may have to be better than the absolute limits provided in the chapter "AC Timing Parameters" in order to satisfy t_{DSS} and t_{DSH} specification. A conceptual timing of this scheme is shown below.

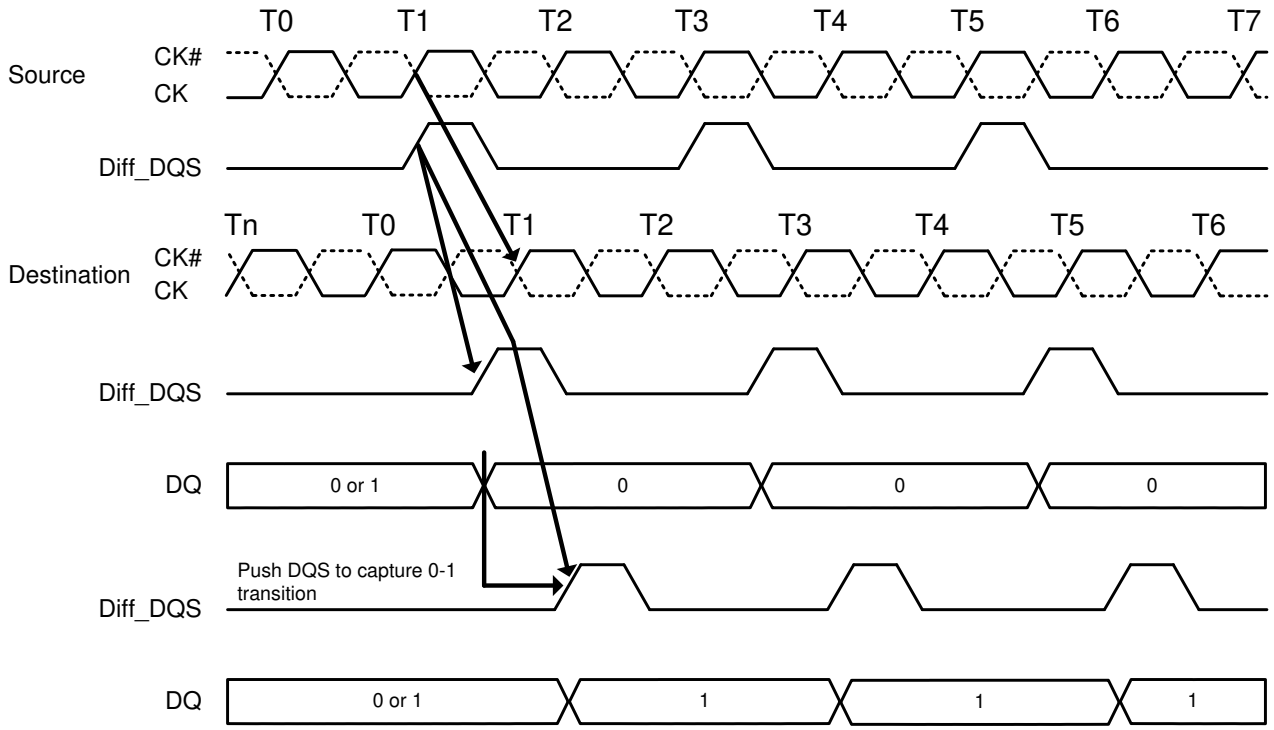

Figure 12. Write Leveling Concept

DQS, DQS# driven by the controller during leveling mode must be terminated by the DRAM based on ranks populated. Similarly, the DQ bus driven by the DRAM must also be terminated at the controller.

All data bits should carry the leveling feedback to the controller across the DRAM configurations x8. Therefore, a separate feedback mechanism should be available for each byte lane. The upper data bits should provide the feedback of the upper diff_DQS to clock relationship whereas the lower data bits would indicate the lower diff_DQS to clock relationship.

DRAM setting for write leveling & DRAM termination function in that mode

DRAM enters into Write leveling mode if A7 in MR1 set 'High' and after finishing leveling, DRAM exits from write leveling mode if A7 in MR1 set 'Low' (see the MR setting involved in the leveling procedure table). Note that in write leveling mode, only DQS terminations are activated and deactivated via ODT pin, unlike normal operation (see the DRAM termination function in the leveling mode table).

Table 15. MR setting involved in the leveling procedure

Function	MR1	Enable	Disable
Write leveling enable	A7	1	0
Output buffer mode (Qoff)	A12	0	1

Table 16. DRAM termination function in the leveling mode

ODT pin @DRAM if $R_{TT_NOM/PARK}$ Value is set via MRS	DQS/DQS# termination	DQs termination
R_{TT_NOM} with ODT High	on	off
R_{TT_PARK} with ODT Low	on	off

Notes:
1. In Write Leveling Mode with its output buffer disabled (MR1[bit A7] = 1 with MR1[bit A12] = 1) all R_{TT_NOM} and R_{TT_PARK} settings are allowed; in Write Leveling Mode with its output buffer enabled (MR1[bit A7] = 1 with MR1[bit A12] = 0) all R_{TT_NOM} and R_{TT_PARK} settings are allowed.
2. Dynamic ODT function is not available in Write Leveling Mode. DRAM MR2 bits A[11:9] must be '000' prior to entering Write Leveling Mode.

Procedure Description

The Memory controller initiates Leveling mode of all DRAMs by setting bit A7 of MR1 to 1. When entering write leveling mode, the DQ pins are in undefined driving mode. During write leveling mode, only Deselect commands are allowed, as well as an MRS command to change Qoff bit (MR1[A12]) and an MRS command to exit write leveling (MR1[A7]). Upon exiting write leveling mode, the MRS command performing the exit (MR1[A7]=0) may also change the other MR1 bits. Since the controller levels one rank at a time, the output of other ranks must be disabled by setting MR1 bit A12 to 1. The Controller may assert ODT after t_{MOD}, at which time the DRAM is ready to accept the ODT signal.

The Controller may drive DQS low and DQS# high after a delay of $t_{WLDQSEN}$, at which time the DRAM has applied on-die termination on these signals. After t_{DQSL} and t_{WLMRD}, the controller provides a single DQS, DQS# edge which is used by the DRAM to sample CK - CK# driven from controller. $t_{WLMRD(max)}$ timing is controller dependent.

DRAM samples CK - CK# status with rising edge of DQS - DQS# and provides feedback on all the DQ bits asynchronously after t_{WLO} timing. There is a DQ output uncertainty of t_{WLOE} defined to allow mismatch on DQ bits. The t_{WLOE} period is defined from the transition of the earliest DQ bit to the corresponding transition of the latest DQ bit. There are no read strobes (DQS/DQS#) needed for these DQs. Controller samples incoming DQs and decides to increment or decrement DQS - DQS# delay setting and launches the next DQS - DQS# pulse after some time, which is controller dependent. Once a 0 to 1 transition is detected, the controller locks DQS - DQS# delay setting and write leveling is achieved for the device. The following figure shows the timing diagram and parameters for the overall Write Leveling procedure.

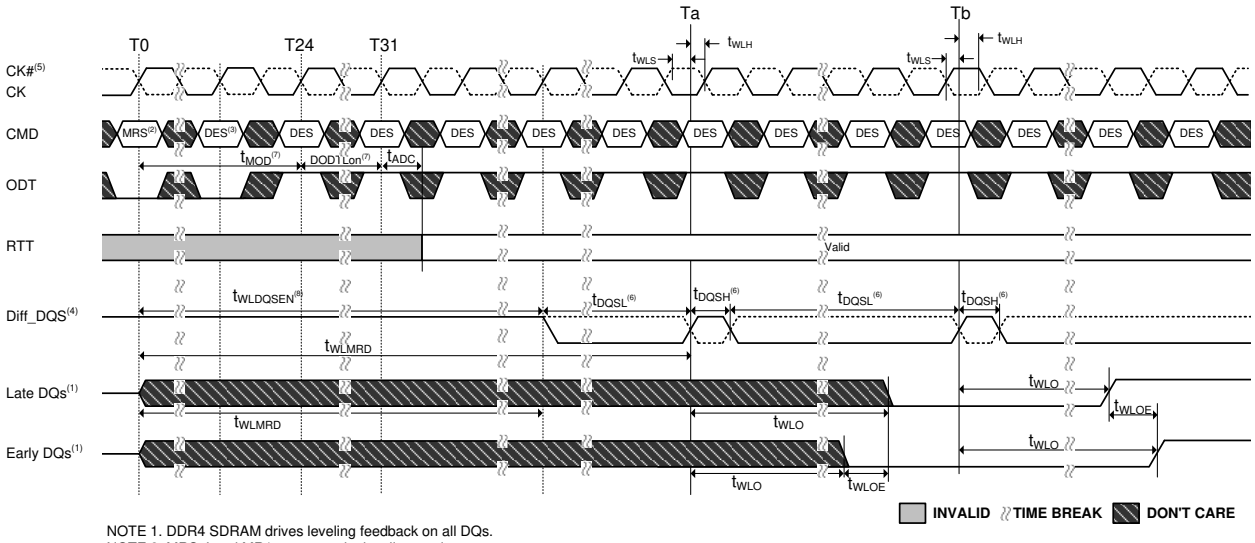

NOTE 1. DDR4 SDRAM drives leveling feedback on all DQs.
NOTE 2. MRS: Load MR1 to enter write leveling mode.
NOTE 3. DES: Deselect.
NOTE 4. diff_DQS is the differential data strobe (DQS-DQS#). Timing reference points are the zero crossings. DQS is shown with solid line, DQS# is shown with dotted line.
NOTE 5. CK/CK#: CK is shown with solid dark line, where as CK# is drawn with dotted line.
NOTE 6. DQS, DQS# needs to fulfill minimum pulse width requirements tDQSH(min) and $t_{DQSL(min)}$ as defined for regular Writes; the max pulse width is system dependent.
NOTE 7. $t_{MOD(Min)}$ = max(24nCK, 15ns), WL = 9 (CWL = 9, AL = 0, PL = 0), DODTLon = WL -2 = 7.
NOTE 8. $t_{WLDQSEN}$ must be satisfied following equation when using ODT.
$t_{WLDQSEN} > t_{MOD(Min)} + ODTLon + t_{ADC}$: at DLL = Enable
$t_{WLDQSEN} > t_{MOD(Min)} + t_{AONAS}$: at DLL = Disable

Figure 13. Write Leveling Sequence (DQS capturing CK low at Ta and CK high at Tb)

Write Leveling Mode Exit

The following sequence describes how the Write Leveling Mode should be exited:

1. After the last rising strobe edge (see ~T0), stop driving the strobe signals (see ~Tc0). Note: From now on, DQ pins are in undefined driving mode, and will remain undefined, until t_{MOD} after the respective MRS command (Te1).
2. Drive ODT pin low (t_{IS} must be satisfied) and continue registering low (see Tb0).
3. After the R_{TT} is switched off, disable Write Level Mode via MRS command (see Tc2).
4. After t_{MOD} is satisfied (Te1), any valid command may be registered. (MRS commands may be issued after t_{MRD} (Td1).

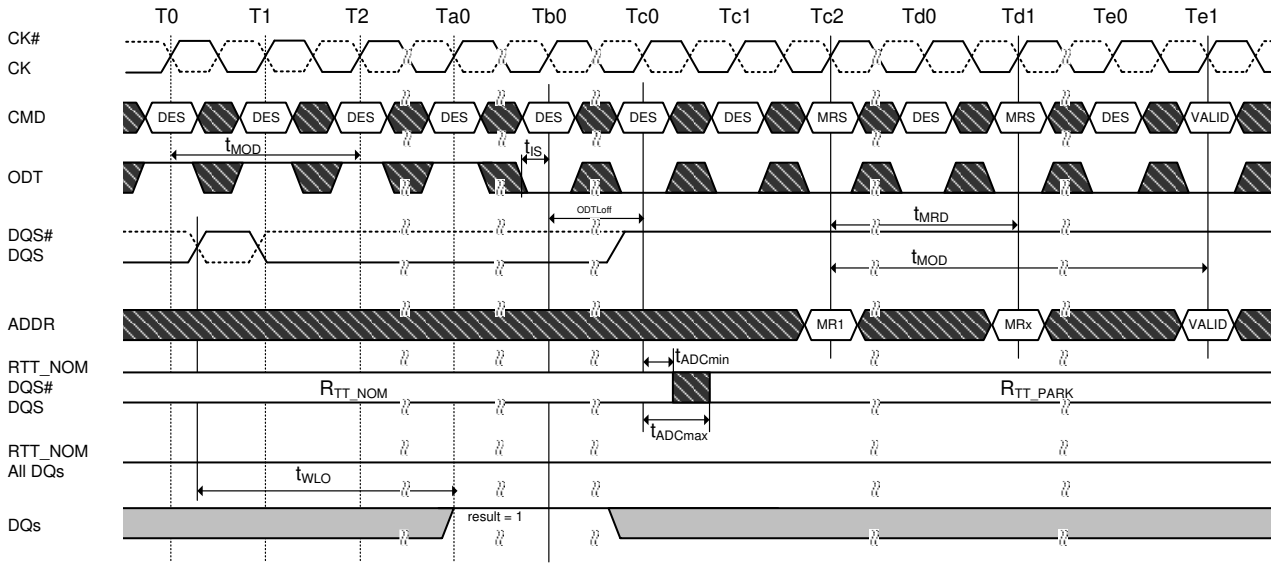

Figure 14. Write Leveling Exit

CAL Mode (CS# to Command Address Latency)

DDR4 supports Command Address Latency (CAL) function as a power savings feature. CAL is the delay in clock cycles between CS# and CMD/ADDR defined by MR4[A8:A6].

CAL gives the DRAM time to enable the CMD/ADDR receivers before a command is issued. Once the command and the address are latched, the receivers can be disabled. For consecutive commands, the DRAM will keep the receivers enabled for the duration of the command sequence.

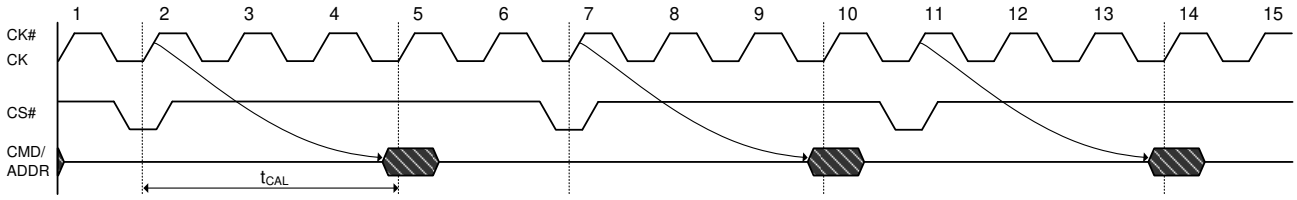

Figure 15. Definition of CAL

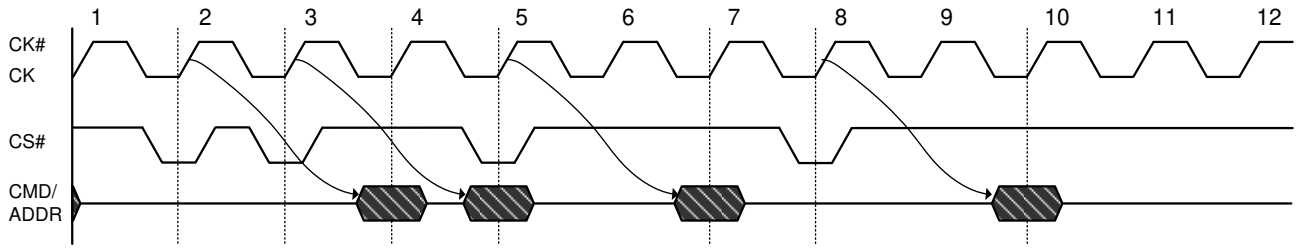

Figure 16. CAL operational timing for consecutive command issues

MRS Timings with Command/Address Latency enabled

When Command/Address latency mode is enabled, users must allow more time for MRS commands to take effect. When CAL mode is enabled, or being enabled by an MRS command, the earliest the next valid command can be issued is t_{MOD_CAL}, where $t_{MOD_CAL} = t_{MOD} + t_{CAL}$.

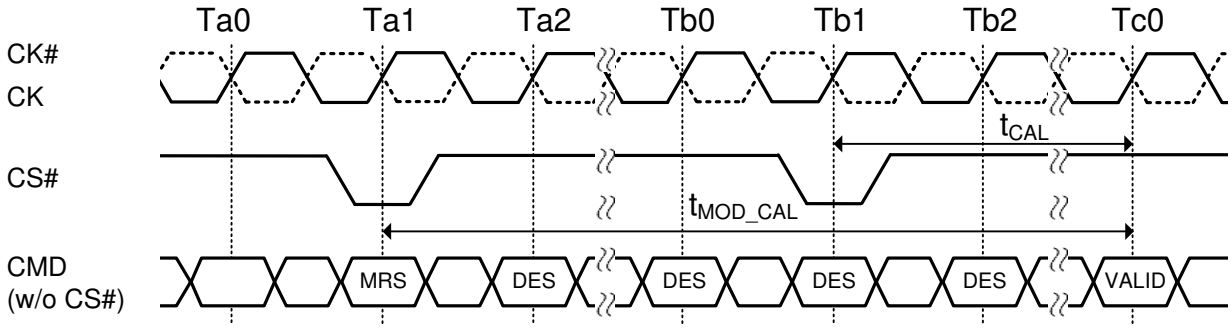

NOTES:
1. MRS command at Ta1 enables CAL mode
2. $t_{MOD_CAL} = t_{MOD} + t_{CAL}$

Figure 17. CAL enable timing - t_{MOD_CAL}

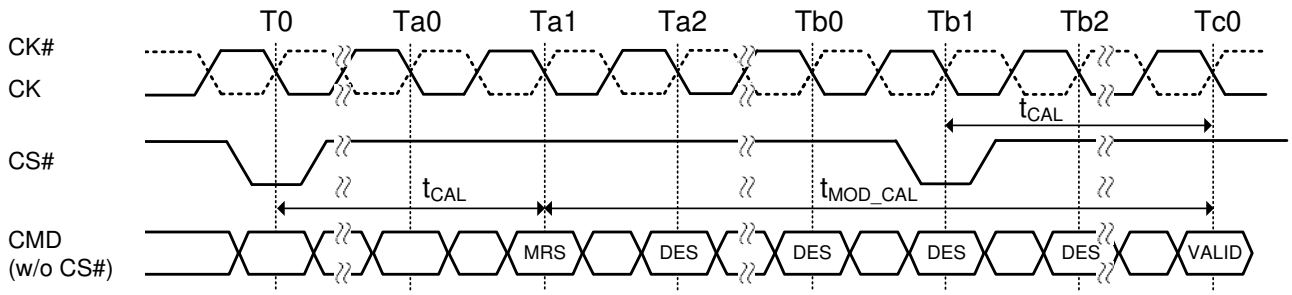

NOTES:
1. MRS at Ta1 may or may not modify CAL, t_{MOD_CAL} is computed based on new tCAL setting.
2. $t_{MOD_CAL} = t_{MOD+tCAL}$

Figure 18. t_{MOD_CAL}, MRS to valid command timing with CAL enabled

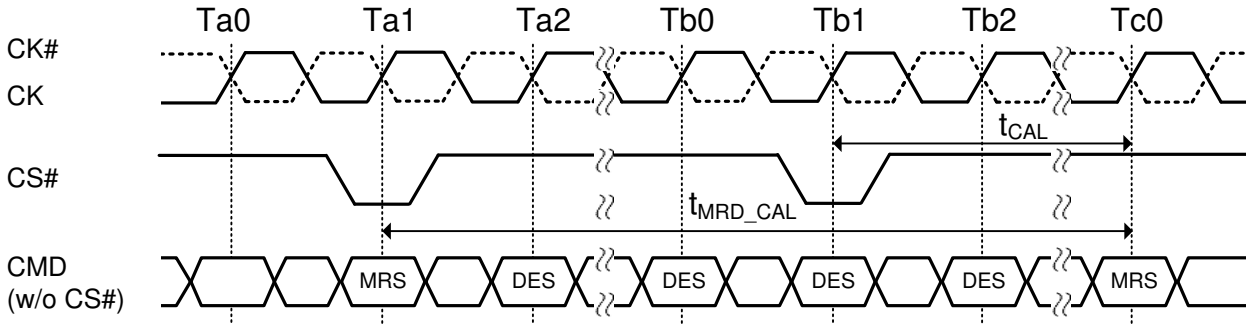

NOTES:
1. MRS command at Ta1 enables CAL mode
2. tMRD_CAL=tMOD+tCAL

Figure 19. CAL enabling MRS to next MRS command, t_{MRD_CAL}

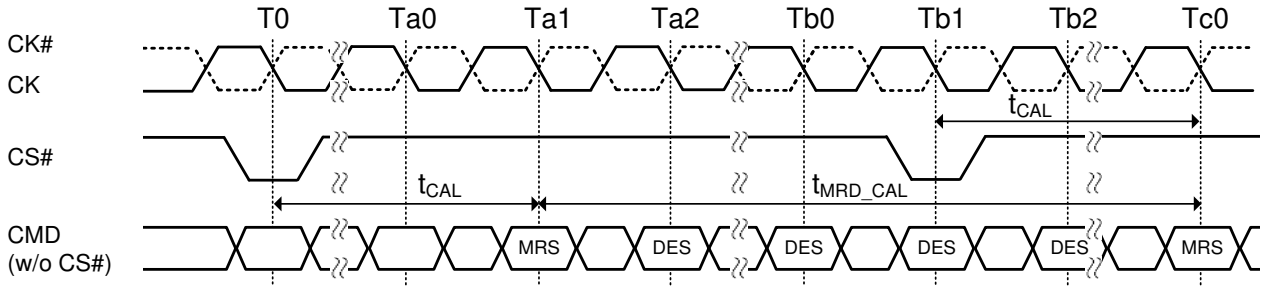

NOTES:
1. MRS at Ta1 may or may not modify CAL, tMRD_CAL is computed based on new tCAL setting.
2. tMRD_CAL=tMOD+tCAL.

Figure 20. t_{MRD_CAL}, mode register cycle time with CAL enabled

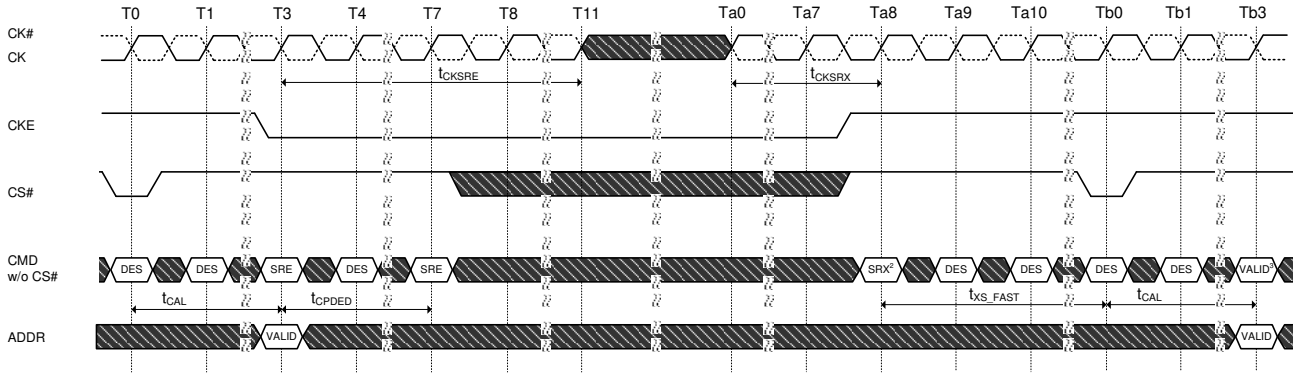

NOTES:
1. tCAL = 3nCK, tCPDED = 4nCK, tCKSRE = 8nCK, tCKSRX = 8nCK, tXS_FAST = tRFC4(min) + 10ns
2. CS# = H, ACT# = Don't Care, RAS#/A16 = Don't Care, CAS#/A15 = Don't Care, WE#/A14 = Don't Care
3. Only MRS (limited to those described in the Self-Refresh Operation section). ZQCS or ZQCL command allowed.

Figure 21. Self Refresh Entry/Exit Timing with CAL

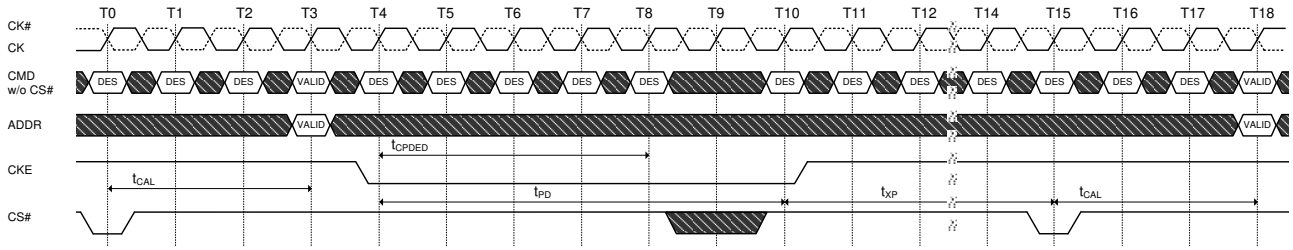

NOTE 1. tCAL = 3nCK, tCPDED = 4nCK, tPD = 6nCK, tXP = 5nCK

Figure 22. Active Power Down Entry and Exit Timing with CAL

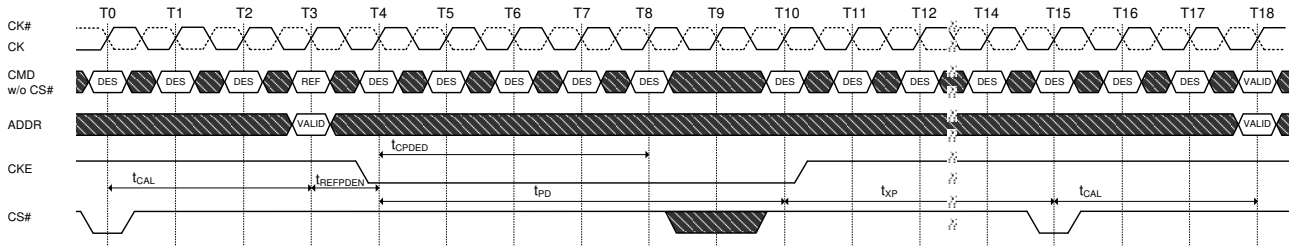

NOTE 1. tCAL = 3nCK, tREFPDEN = 1nCK, tCPDED = 4nCK, tPD = 6nCK, tXP = 5nCK

Figure 23. Refresh Command to Power Down Entry with CAL

Fine Granularity Refresh Mode

DDR4 supports Command Address Latency (CAL) function as a power savings feature. CAL is the delay in clock cycles between CS# and CMD/ADDR defined by MR4[A8:A6].

CAL gives the DRAM time to enable the CMD/ADDR receivers before a command is issued. Once the command and the address are latched, the receivers can be disabled. For consecutive commands, the DRAM will keep the receivers enabled for the duration of the command sequence.

Mode Register and Command Truth Table

The Refresh cycle time (t_{RFC}) and the average Refresh interval (t_{REFI}) can be programmed by the MRS command. The appropriate setting in the mode register will set a single set of Refresh cycle time and average Refresh interval for the device (fixed mode), or allow the dynamic selection of one of two sets of Refresh cycle time and average Refresh interval for the device (on-the-fly mode). The on-the-fly (OTF) mode must be enabled by MRS before any on-the-fly Refresh command can be issued.

Table 17. MR3 definition for Fine Granularity Refresh Mode

A8	A7	A6	Fine Granularity Refresh
0	0	0	Normal Mode (Fixed 1x)
0	0	1	Fixed 2x
0	1	0	Fixed 4x
0	1	1	Reserved
1	0	0	Reserved
1	0	1	Enable on the fly 2x
1	1	0	Enable on the fly 4x
1	1	1	Reserved

There are two types of on-the-fly modes (1x/2x and 1x/4x modes) that are selectable by programming the appropriate values into the mode register. When either of the two on-the-fly modes is selected (‘A8=1’), the device evaluates BG0 bit when a Refresh command is issued, and depending on the status of BG0, it dynamically switches its internal Refresh configuration between 1x and 2x (or 1x and 4x) modes, and executes the corresponding Refresh operation.

Table 18. Refresh command truth table

Function	CS#	ACT#	RAS#/ A16	CAS#/ A15	WE#/ A14	BG1	BG0	BA0-1	A10/AP	A[9:0], A[13:11]	MR3 [8:6]
Refresh (Fixed rate)	L	H	L	L	H	V	V	V	V	V	0VV
Refresh (on-the-fly 1x)	L	H	L	L	H	V	L	V	V	V	1VV
Refresh (on-the-fly 2x)	L	H	L	L	H	V	H	V	V	V	101
Refresh (on-the-fly 4x)	L	H	L	L	H	V	H	V	V	V	110

t_{REFI} and t_{RFC} parameters

The default Refresh rate mode is fixed 1x mode where Refresh commands should be issued with the normal rate, i.e., $t_{REFI}1 = t_{REFI(base)}$ (for $T_{CASE} \leq 85°C$), and the duration of each refresh command is the normal refresh cycle time ($t_{RFC}1$). In 2x mode (either fixed 2x or on-the-fly 2x mode), Refresh commands should be issued to the device at the double frequency ($t_{REFI}2 = t_{REFI(base)}/2$) of the normal Refresh rate. In 4x mode, Refresh command rate should be quadrupled ($t_{REFI}4 = t_{REFI(base)}/4$). Per each mode and command type, t_{RFC} parameter has different values as defined in the following table.

The refresh command that should be issued at the normal refresh rate and has the normal refresh cycle duration may be referred to as a REF1x command. The refresh command that should be issued at the double frequency ($t_{REFI}2 = t_{REFI(base)}/2$) may be referred to as a REF2x command. Finally, the refresh command that should be issued at the quadruple rate ($t_{REFI}4 = t_{REFI(base)}/4$) may be referred to as a REF4x command.

In the Fixed 1x Refresh rate mode, only REF1x commands are permitted. In the Fixed 2x Refresh rate mode, only REF2x commands are permitted. In the Fixed 4x Refresh rate mode, only REF4x commands are permitted. When the on-the-fly 1x/2x Refresh rate mode is enabled, both REF1x and REF2x commands are permitted. When the on-the-fly 1x/4x Refresh rate mode is enabled, both REF1x and REF4x commands are permitted.

Table 19. Refresh command truth table

Refresh Mode	Parameter		8Gb	Unit
	$t_{REFI(base)}$		7.8	µS
1x mode	$t_{REFI}1$	$-40°C \leq T_{CASE} \leq 85°C$	$t_{REFI(base)}$	µS
		$85°C \leq T_{CASE} \leq 95°C$	$t_{REFI(base)}/2$	µS
	$t_{RFC}1$(min)		350	ns
2x mode	$t_{REFI}2$	$-40°C \leq T_{CASE} \leq 85°C$	$t_{REFI(base)}/2$	µS
		$85°C \leq T_{CASE} \leq 95°C$	$t_{REFI(base)}/4$	µS
	$t_{RFC}2$(min)		260	ns
4X mode	$t_{REFI}4$	$-40°C \leq T_{CASE} \leq 85°C$	$t_{REFI(base)}/4$	µS
		$85°C \leq T_{CASE} \leq 95°C$	$t_{REFI(base)}/8$	µS
	$t_{RFC}4$(min)		160	ns

Changing Refresh Rate

If Refresh rate is changed by either MRS or on the fly, new t_{REFI} and t_{RFC} parameters would be applied from the moment of the rate change. When REF1x command is issued to the DRAM, then $t_{REF}1$ and $t_{RFC}1$ are applied from the time that the command was issued. when REF2x command is issued, then $t_{REF}2$ and $t_{RFC}2$ should be satisfied.

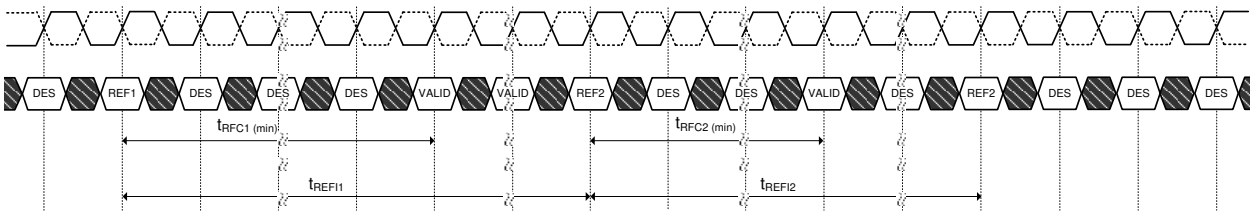

Figure 24. On-the-fly Refresh Command Timing

The following conditions must be satisfied before the Refresh rate can be changed. Otherwise, data retention cannot be guaranteed.

- In the fixed 2x Refresh rate mode or the on-the-fly 1x/2x Refresh mode, an even number of REF2x commands must be issued because the last change of the Refresh rate mode with an MRS command before the Refresh rate can be changed by another MRS command.
- In the on-the-fly 1x/2x Refresh rate mode, an even number of REF2x commands must be issued between any two REF1x commands.
- In the fixed 4x Refresh rate mode or the on-the-fly 1x/4x Refresh mode, a multiple of-four number of REF4x commands must be issued to the DDR4 SDRAM since the last change of the Refresh rate with an MRS command before the Refresh rate can be changed by another MRS command.
- In the on-the-fly 1x/4x Refresh rate mode, a multiple-of-four number of REF4x commands must be issued between any two REF1x commands.

There are no special restrictions for the fixed 1x Refresh rate mode. Switching between fixed and on-the-fly modes keeping the same rate is not regarded as a Refresh rate change.

Usage with Temperature Controlled Refresh mode

If the Temperature Controlled Refresh mode is enabled, then only the normal mode (Fixed 1x mode; MR3 [8:6] = 000) is allowed. If any other Refresh mode than the normal mode is selected, then the temperature controlled Refresh mode must be disabled.

Self Refresh entry and exit

The device can enter Self Refresh mode anytime in 1x, 2x and 4x mode without any restriction on the number of Refresh commands that has been issued during the mode before the Self Refresh entry. However, upon Self Refresh exit, extra Refresh command(s) may be required depending on the condition of the Self Refresh entry. The conditions and requirements for the extra Refresh command(s) are defined as follows:

1. There are no special restrictions on the fixed 1x Refresh rate mode.
2. In the fixed 2x Refresh rate mode or the enable-on-the-fly 1x/2x Refresh rate mode, it is recommended that there should be an even number of REF2x commands before entry into Self Refresh since the last Self Refresh exit or REF1x command or MRS command that set the refresh mode. If this condition is met, no additional refresh commands are required upon Self Refresh exit. In the case that this condition is not met, either one extra REF1x command or two extra REF2x commands are required to be issued to the DDR4 SDRAM upon Self Refresh exit. These extra Refresh commands are not counted toward the computation of the average refresh interval (t_{REFI}).
3. In the fixed 4x Refresh rate mode or the enable-on-the-fly 1x/4x Refresh rate mode, it is recommended that there should be a multiple-of-four number of REF4x commands before entry into Self Refresh since the last Self Refresh exit or REF1x command or MRS command that set the refresh mode. If this condition is met, no additional refresh commands are required upon Self Refresh exit. In the case that this condition is not met, either one extra REF1x command or four extra REF4x commands are required to be issued to the DDR4 SDRAM upon Self Refresh exit. These extra Refresh commands are not counted toward the computation of the average refresh interval (t_{REFI}).

Self Refresh Operation

The Self-Refresh command can be used to retain data in the device, even if the rest of the system is powered down. When in the Self-Refresh mode, the device retains data without external clocking. The device has a built-in timer to accommodate Self-Refresh operation. The Self-Refresh-Entry (SRE) Command is defined by having CS#, RAS#/A16, CAS#/A15, and CKE held low with WE#/A14 and ACT# high at the rising edge of the clock.

Before issuing the Self-Refresh-Entry command, the device must be idle with all bank precharge state with t_{RP} satisfied. Idle state is defined as all banks are closed (t_{RP}, t_{DAL}, etc. satisfied), no data bursts are in progress, CKE is high, and all timings from previous operations are satisfied (t_{MRD}, t_{MOD}, t_{RFC}, t_{ZQinit}, t_{ZQoper}, t_{ZQCS}, etc.). Deselect command must be registered on last positive clock edge before issuing Self Refresh Entry command. Once the Self Refresh Entry command is registered, Deselect command must also be registered at the next positive clock edge. Once the Self-Refresh Entry command is registered, CKE must be held low to keep the device in Self-Refresh mode. DRAM automatically disables ODT termination and set Hi-Z as termination state regardless of ODT pin and R_{TT_PARK} set when it enters in Self-Refresh mode. Upon exiting Self-Refresh, DRAM automatically enables ODT termination and set R_{TT_PARK} asynchronously during t_{XSDLL} when R_{TT_PARK} is enabled. During normal operation (DLL on) the DLL is automatically disabled upon entering Self-Refresh and is automatically enabled (including a DLL-Reset) upon exiting Self-Refresh.

When the device has entered Self-Refresh mode, all of the external control signals, except CKE and RESET#, are “don’t care.” For proper Self-Refresh operation, all power supply and reference pins (V_{DD}, V_{DDQ}, V_{SS}, V_{SSQ}, V_{PP}, and V_{REFCA}) must be at valid levels. DRAM internal V_{REFDQ} generator circuitry may remain on or turned off depending on the MR6 bit 7 setting. If DRAM internal V_{REFDQ} circuitry is turned off in self refresh, when DRAM exits from self refresh state, it ensures that V_{REFDQ} generator circuitry is powered up and stable within t_{XS} period. First Write operation or first Write Leveling Activity may not occur earlier than t_{XS} after exit from Self Refresh. The DRAM initiates a minimum of one Refresh command internally within t_{CKE} period once it enters Self-Refresh mode.

The clock is internally disabled during Self-Refresh Operation to save power. The minimum time that the DDR4 SDRAM must remain in Self-Refresh mode is t_{CKESR}. The user may change the external clock frequency or halt the external clock t_{CKSRE} after Self- Refresh entry is registered, however, the clock must be restarted and stable t_{CKSRX} before the device can exit Self-Refresh operation.

The procedure for exiting Self-Refresh requires a sequence of events. First, the clock must be stable prior to CKE going back high. Once a Self-Refresh Exit command (SRX, combination of CKE going high and Deselect on command bus) is registered, following timing delay must be satisfied:

Commands that do not require locked DLL:

- t_{XS} = ACT, PRE, PREA, REF, SRE, PDE, WR, WRS4, WRS8, WRA, WRAS4, WRAS8
- t_{XSFast} = ZQCL, ZQCS, MRS commands. For MRS command, only DRAM CL and WR/RTP register and DLL Reset in MR0, R_{TT_NOM} register in MR1, CWL and R_{TT_WR} register in MR2 and geardown mode in MR3, Write and Read Preamble register in MR4, R_{TT_PARK} register in MR5, t_{CCD_L}/t_{DLLK} and V_{REFDQ} Training Value in MR6 are allowed to be accessed provided DRAM is not in per DRAM addressability mode. Access to other DRAM mode registers must satisfy t_{XS} timing. Note that synchronous ODT for write commands (WR, WRS4, WRS8, WRA, WRAS4 and WRAS8) and dynamic ODT controlled by write command require locked DLL.

Commands that require locked DLL:

- t_{XSDLL} - RD, RDS4, RDS8, RDA, RDAS4, RDAS8

Depending on the system environment and the amount of time spent in Self-Refresh, ZQ calibration commands may be required to compensate for the voltage and temperature drift as described in the ZQ Calibration Commands section. To issue ZQ calibration commands, applicable timing requirements must be satisfied.

CKE must remain high for the entire Self-Refresh exit period t_{XSDLL} for proper operation except for Self-Refresh re-entry. Upon exit from Self-Refresh, the device can be put back into Self-Refresh mode or Power down mode after waiting at least t_{XS} period and issuing one refresh command (refresh period of t_{RFC}). Deselect commands must be registered on each positive clock edge during the Self-Refresh exit interval t_{XS}. Low level of ODT pin must be registered on each positive clock edge during t_{XSDLL} when normal mode (DLL-on) is set. Under DLL-off mode, asynchronous ODT function might be allowed.

The use of Self-Refresh mode introduces the possibility that an internally timed refresh event can be missed when CKE is raised for exit from Self-Refresh mode. Upon exit from Self-Refresh, the device requires a minimum of one extra refresh command before it is put back into Self-Refresh Mode.

Self Refresh Abort

The exit timing from self-refresh exit to first valid command not requiring a locked DLL is t_{XS}. The value of t_{XS} is (t_{RFC}+10ns). This delay is to allow for any refreshes started by the DRAM to complete. t_{RFC} continues to grow with higher density devices so t_{XS} will grow as well.

A Bit A9 in MR4 is defined to enable the self refresh abort mode. If the bit is disabled then the controller uses t_{XS} timings. If the bit is enabled then the DRAM aborts any ongoing refresh and does not increment the refresh counter. The controller can issue a valid command not requiring a locked DLL after a delay of t_{XS_abort}.

Upon exit from Self-Refresh, the device requires a minimum of one extra refresh command before it is put back into Self- Refresh Mode. This requirement remains the same irrespective of the setting of the MRS bit for self refresh abort.

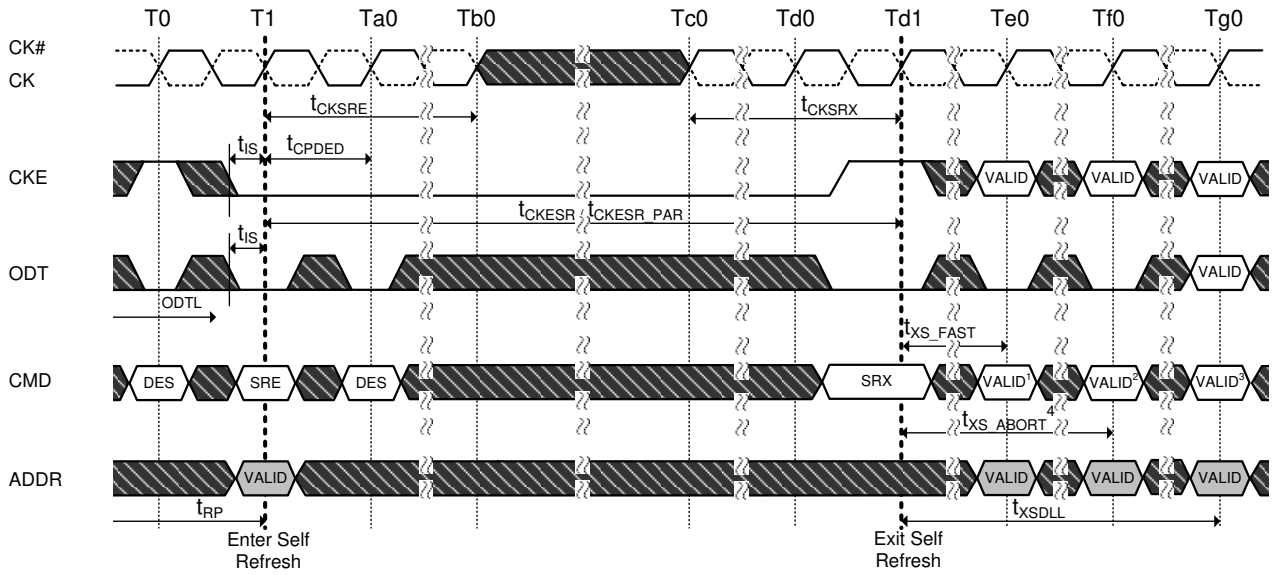

NOTE 1. Only MRS (limited to those described in the Self-Refresh Operation section). ZQCS or ZQCL command allowed.
NOTE 2. Valid commands not requiring a locked DLL.
NOTE 3. Valid commands requiring a locked DLL.
NOTE 4. Only DES is allowed during tXS_ABORT.

Figure 25. Self-Refresh Entry/Exit Timing

Low Power Auto Self Refresh (LPASR)

DDR4 devices support Low Power Auto Self-Refresh (LPASR) operation at multiple temperatures ranges (See temperature table below)

Auto Self Refresh (ASR)

DDR4 DRAM provides an Auto Self-Refresh mode (ASR) for application ease. ASR mode is enabled by setting the above MR2 bits A6=1 and A7=1. The device will manage Self Refresh entry through the supported temperature range of the DRAM. In this mode, the device will change self-refresh rate as the DRAM operating temperature changes, lower at low temperatures and higher at high temperatures.

Manual Modes

If ASR mode is not enabled, the LPASR Mode Register must be manually programmed to one of the three self-refresh operating modes. In this mode, the user has the flexibility to select a fixed self-refresh operating mode at the entry of the selfrefresh according to their system memory temperature conditions. The user is responsible to maintain the required memory temperature condition for the mode selected during the self-refresh operation. The user may change the selected mode after exiting from self refresh and before the next self-refresh entry. If the temperature condition is exceeded for the mode selected, there is risk to data retention resulting in loss of data.

Table 20. Self Refresh Function table

MR2 [A7]	MR2 [A6]	LPASR Mode	Self Refresh Operation	Allowed Operating Temperature Range for Self Refresh Mode (all reference to DRAM T_{CASE})
0	0	Normal	Fixed normal self-Refresh rate to maintain data retention for the normal operating temperature. User is required to ensure 85°C DRAM $T_{CASE(max)}$ is not exceeded to avoid any risk of data loss	(-40°C ~ 85°C)
0	1	Reduced Temperature range	Variable or fixed self-Refresh rate or any other DRAM power consumption reduction control for the reduced temperature range. User is required to ensure 45°C DRAM $T_{CASE(max)}$ is not exceeded to avoid any risk of data loss	(-40°C ~ 45°C)
1	0	Extended Temperature range	Fixed high self-Refresh rate to optimize data retention to support the extended temperature range	(-40°C ~ 95°C)
1	1	Auto Self Refresh	ASR Mode Enabled. Self-Refresh power consumption and data retention are optimized for any given operating temperature conditions	All of the above

Self Refresh Exit with No Operation command

Self Refresh Exit with No Operation command (NOP) allows for a common command/address bus between active DRAM and DRAM in Max Power Saving Mode. Self Refresh Mode may exit with No Operation commands (NOP) provided:

- The DRAM entered Self Refresh Mode with CA Parity and CAL disabled.
- t_{MPX_S} and t_{MPX_LH} are satisfied.
- NOP commands are only issued during t_{MPX_LH} window.

No other command is allowed during t_{MPX_LH} window after SRX command is issued.

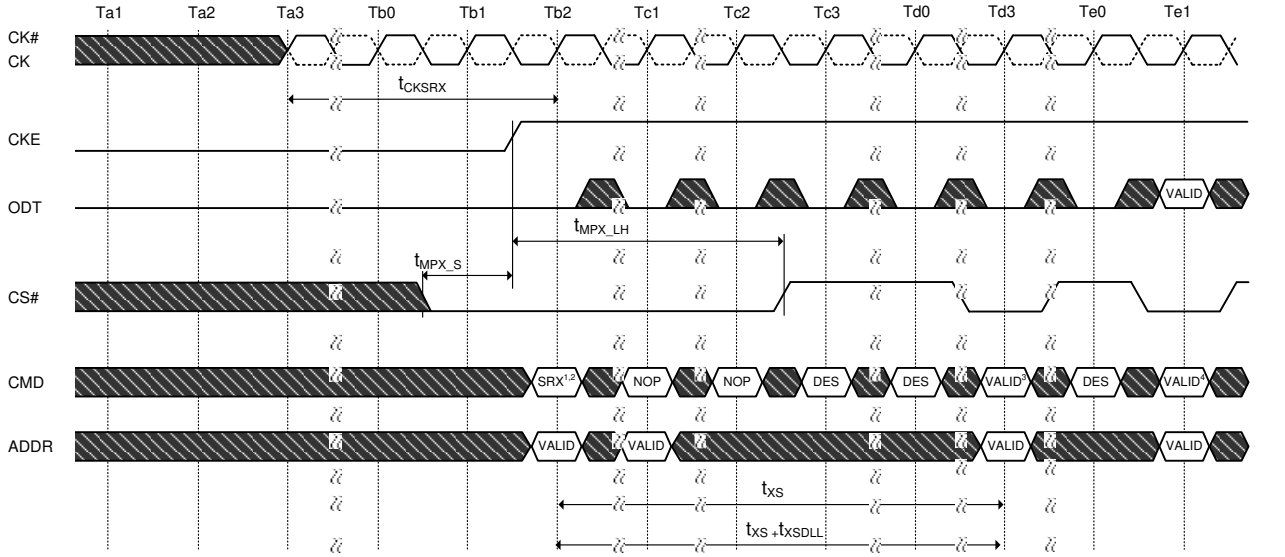

NOTE 1. CS# = L, ACT# = H, RAS#/A16 = H, CAS#/A15 = H, WE#/A14 = H at Tb2 (No Operation command)
NOTE 2. SRX at Tb2 is only allowed when DRAM shared Command/Address bus is under exiting Max Power Saving Mode.
NOTE 3. Valid commands not requiring a locked DLL
NOTE 4. Valid commands requiring a locked DLL
NOTE 5. t_{XS_FAST} and t_{XS_ABORT} are not allowed this case.
NOTE 6. Duration of CS# Low around CKE rising edge must satisfy t_{MPX_S} and t_{MPX_LH} as defined by Max Power Saving Mode AC parameters.

Figure 26. Self Refresh Exit with No Operation command

Power down Mode

Power-down is synchronously entered when CKE is registered low (along with Deselect command). CKE is not allowed to go low while mode register set command, MPR operations, ZQCAL operations, DLL locking or Read / Write operation are in progress. CKE is allowed to go low while any of other operations such as row activation, precharge or auto-precharge and refresh are in progress, but power-down IDD spec will not be applied until finishing those operations. Timing diagrams below illustrate entry and exit of power-down.

The DLL should be in a locked state when power-down is entered for fastest power-down exit timing. If the DLL is not locked during power-down entry, the DLL must be reset after exiting power-down mode for proper read operation and synchronous ODT operation. DRAM design provides all AC and DC timing and voltage specification as well as proper DLL operation with any CKE intensive operations as long as DRAM controller complies with DRAM specifications.

During Power-Down, if all banks are closed after any in-progress commands are completed, the device will be in precharge Power-Down mode; if any bank is open after in-progress commands are completed, the device will be in active Power-Down mode.

Entering power-down deactivates the input and output buffers, excluding CK, CK#, CKE and RESET#. In power-down mode, DRAM ODT input buffer deactivation is based on MR5 bit A5. If it is conured to 0b, ODT input buffer remains on and ODT input signal must be at valid logic level. If it is configured to 1b, ODT input buffer is deactivated and DRAM ODT input signal may be floating and DRAM does not provide R_{TT_NOM} termination. Note that DRAM continues to provide R_{TT_PARK} termination if it is enabled in DRAM mode register MR5 A[8:6]. To protect DRAM internal delay on CKE line to block the input signals, multiple Deselect commands are needed during the CKE switch off and cycle(s) after, this timing period are defined as t_{CPDED}. CKE low will result in deactivation of command and address receivers after t_{CPDED} has expired.

Table 21. Power-Down Entry Definitions

Status of DRAM	DLL	PD Exit	Relevant Parameters
Active (A bank or more Open)	On	Fast	t_{XP} to any valid command
Precharged (All banks precharged)	On	Fast	t_{XP} to any valid command

Also, the DLL is kept enabled during precharge power-down or active power-down. In power-down mode, CKE low, RESET# high, and a stable clock signal must be maintained at the inputs of the device, and ODT should be in a valid state, but all other input signals are “Don’t Care.” (If RESET# goes low during Power-Down, the device will be out of power-down mode and into reset state.) CKE low must be maintained until t_{CKE} has been satisfied. Power-down duration is limited by 9 times t_{REFI}.

The power-down state is synchronously exited when CKE is registered high (along with a Deselect command). CKE high must be maintained until t_{CKE} has been satisfied. The ODT input signal must be at valid level when device exits from power-down mode independent of MR5 bit A5 if R_{TT_NOM} is enabled in DRAM mode register. If R_{TT_NOM} is disabled then ODT input signal may remain floating. A valid, executable command can be applied with power-down exit latency, t_{XP} after CKE goes high. Power-down exit latency is defined in the AC specifications table.

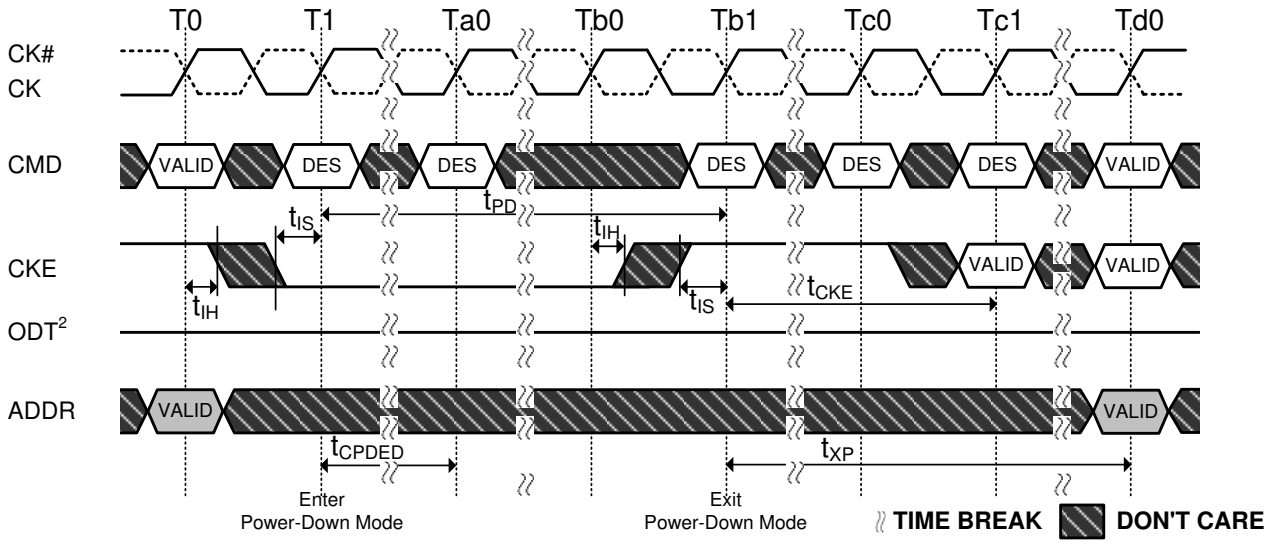

NOTE 1. VALID command at T0 is ACT, DES or Precharge with still one bank remaining open after completion of the precharge command.
NOTE 2. ODT pin driven to a valid state. MR5 bit A5=0 (default setting) is shown.

Figure 27. Active Power-Down Entry and Exit Timing Diagram MR5 bit A5 =0

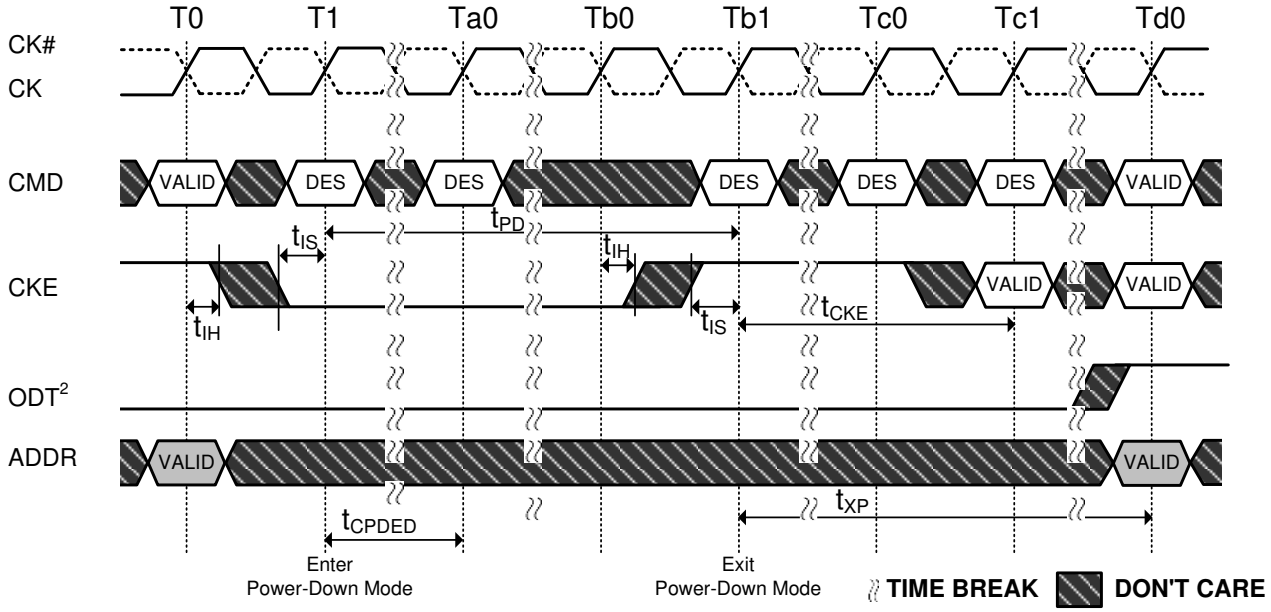

NOTE 1. VALID command at T0 is ACT, DES or Precharge with still one bank remaining open after completion of the precharge command.
NOTE 2. ODT pin driven to a valid state. MR5 bit A5=1 is shown.

Figure 28. Active Power-Down Entry and Exit Timing Diagram MR5 bit A5=1

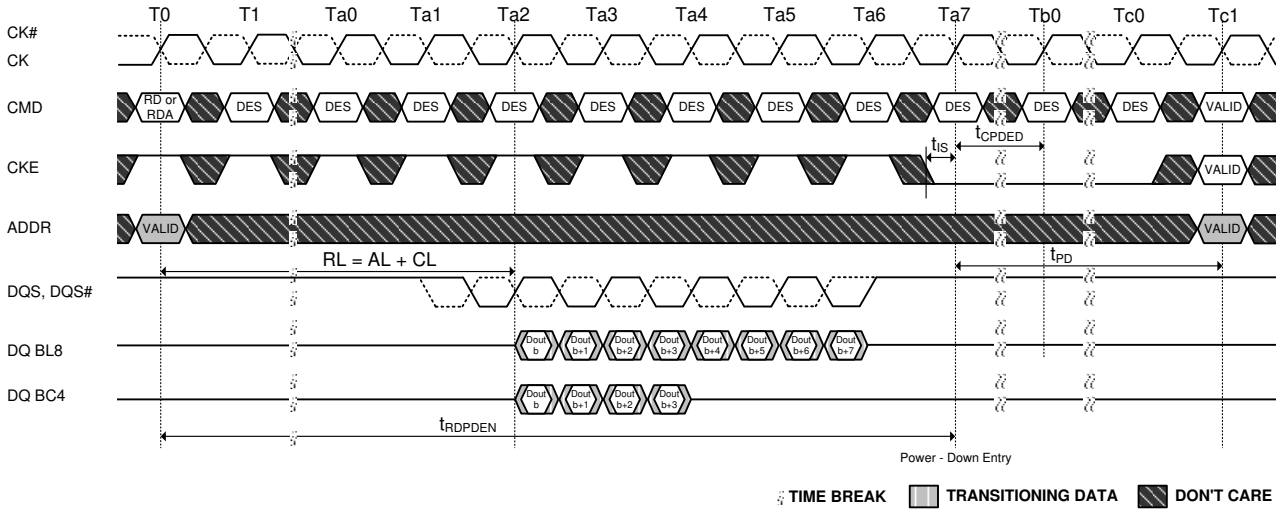

Figure 29. Power-Down Entry after Read and Read with Auto Precharge

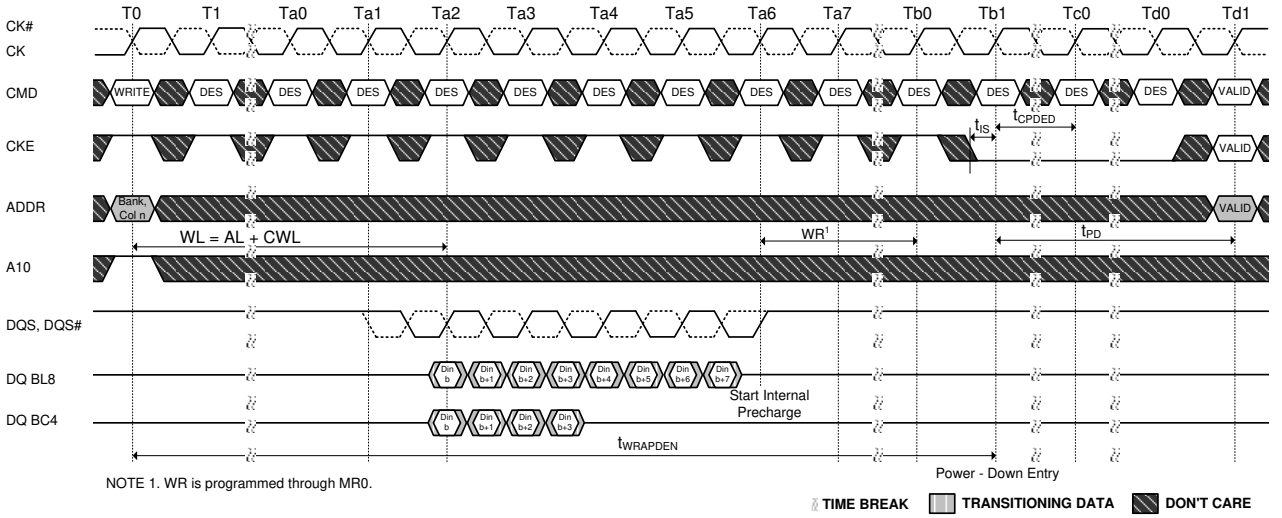

NOTE 1. WR is programmed through MR0.

Figure 30. Power-Down Entry After Write with Auto Precharge

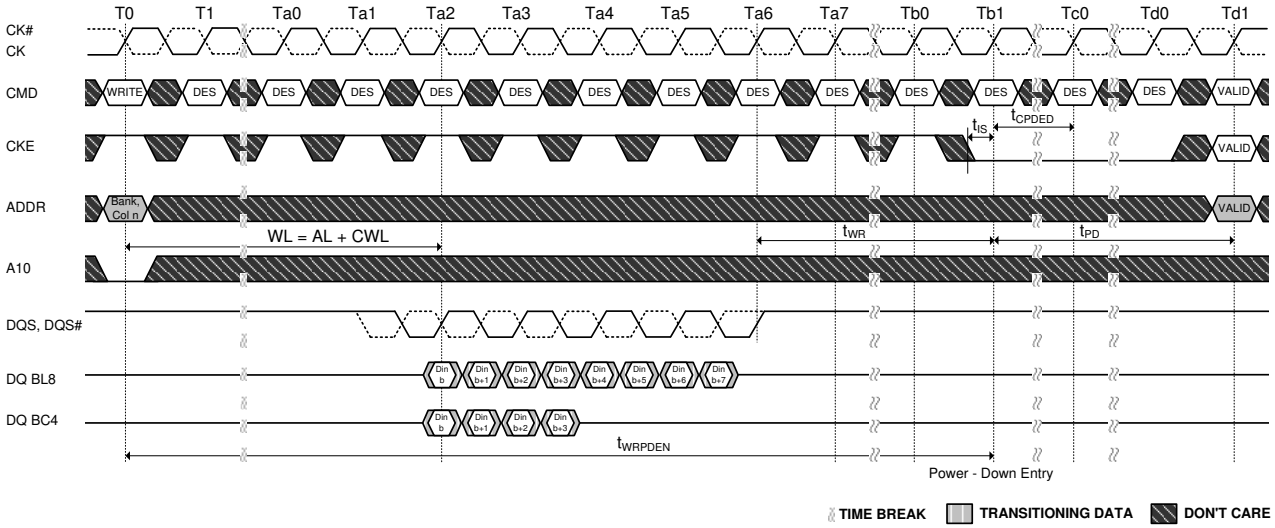

Figure 31. Power-Down Entry After Write

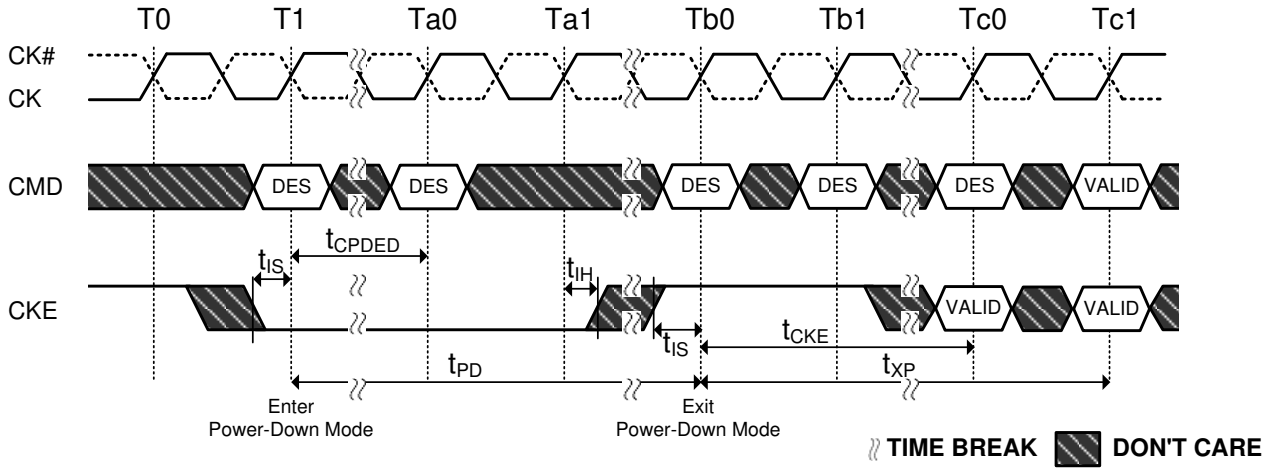

Figure 32. Precharge Power-Down Entry and Exit

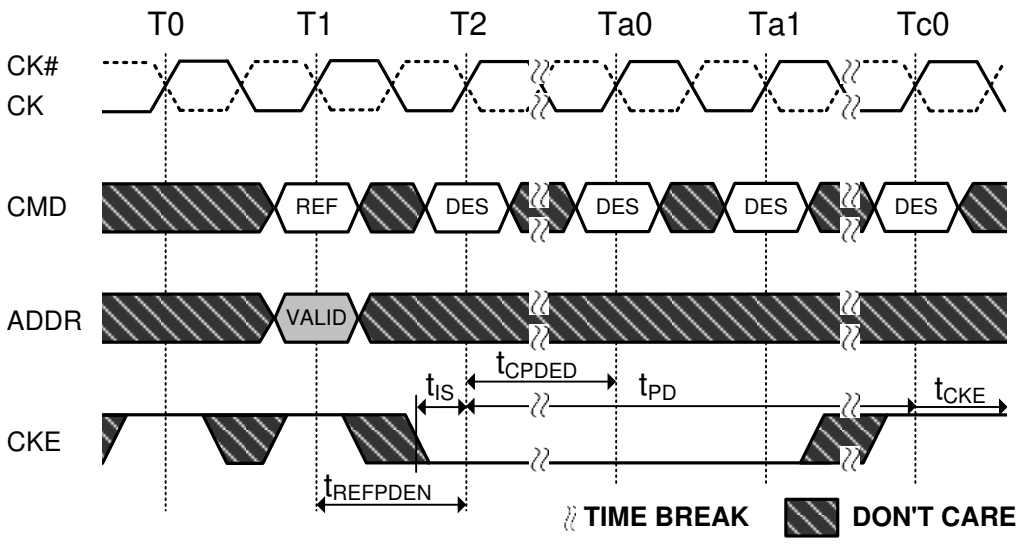

Figure 33. Refresh Command Power-Down Entry

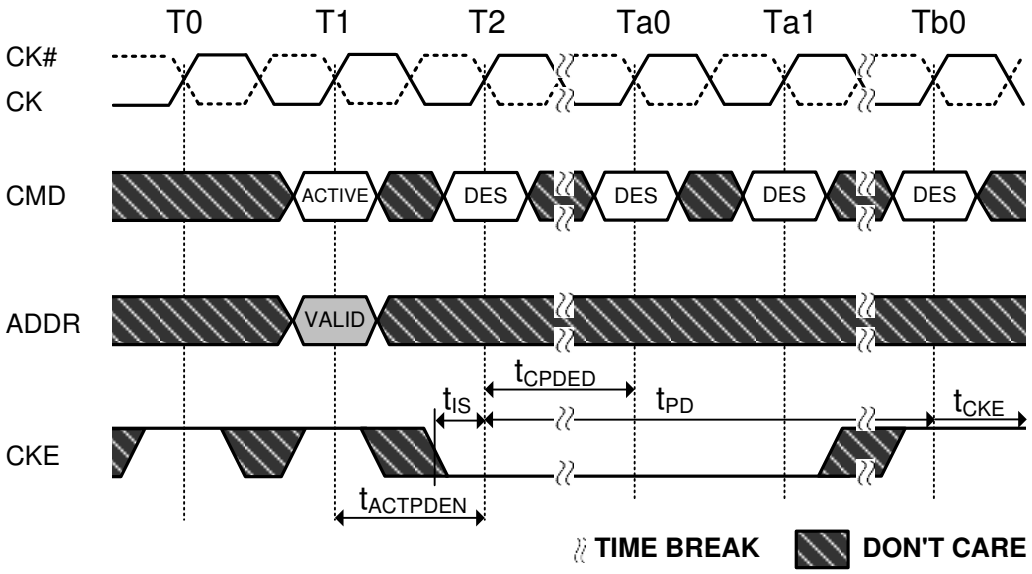

Figure 34. Activate Command Power-Down Entry

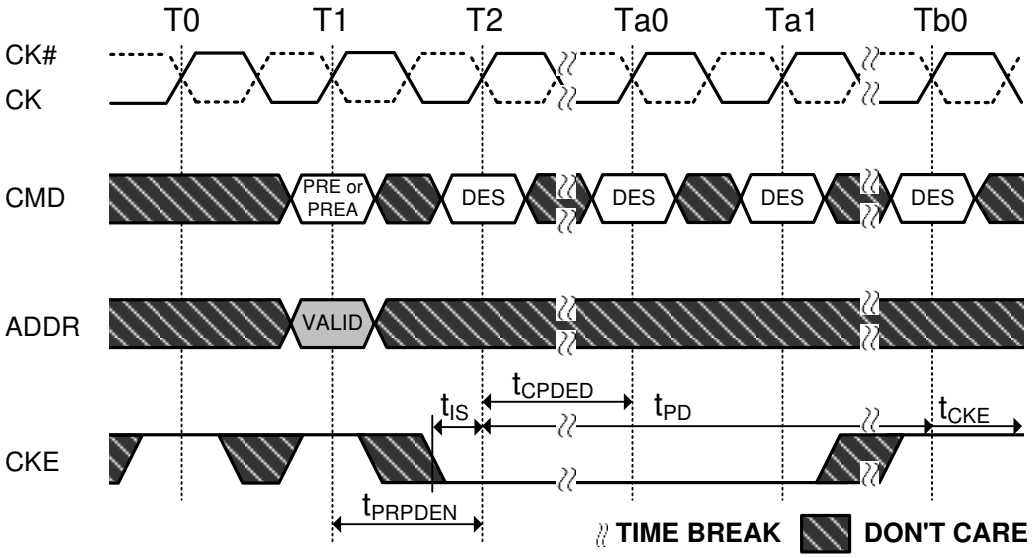

Figure 35. Precharge/Precharge all Command Power-Down Entry

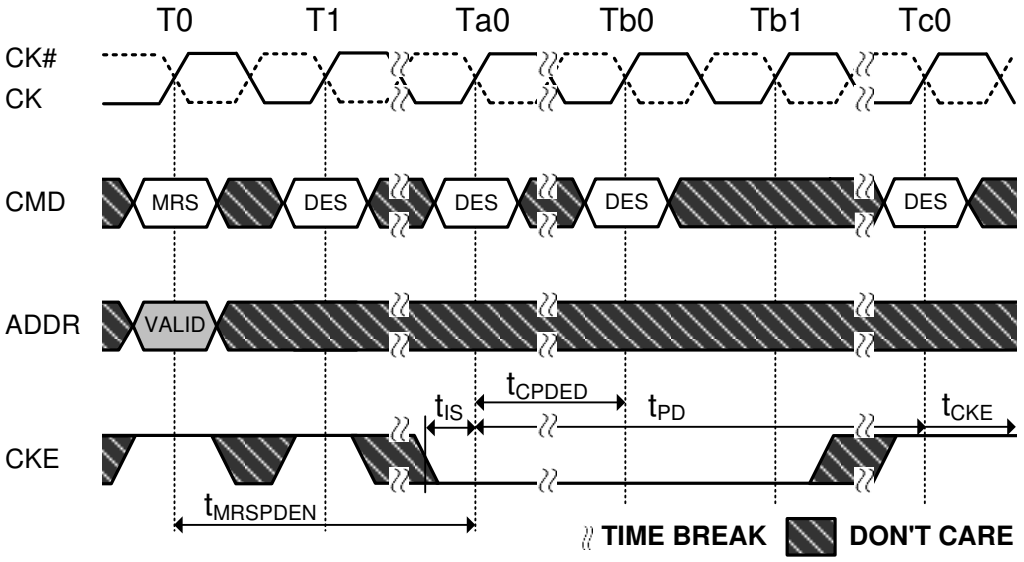

Figure 36. MRS Command Power-Down Entry

Power-Down Clarifications

When CKE is registered low for power-down entry, $t_{PD\ (MIN)}$ must be satisfied before CKE can be registered high for power-down exit. The minimum value of parameter $t_{PD\ (MIN)}$ is equal to the minimum value of parameter $t_{CKE\ (MIN)}$ as shown in the timing parameters table. A detailed example of Case 1 is shown below.

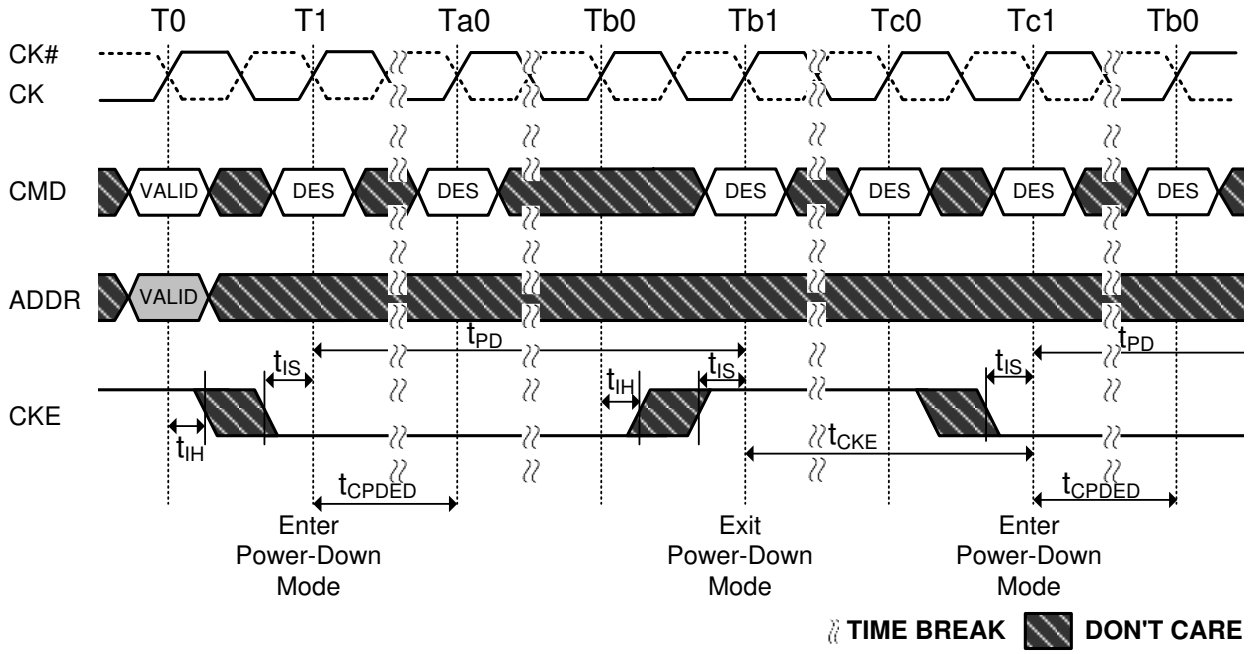

Figure 37. Power-Down Entry/Exit Clarification

Power Down Entry and Exit timing during Command/Address Parity Mode is Enable

Power Down entry and exit timing during Command/Address Parity mode is enable shown below.

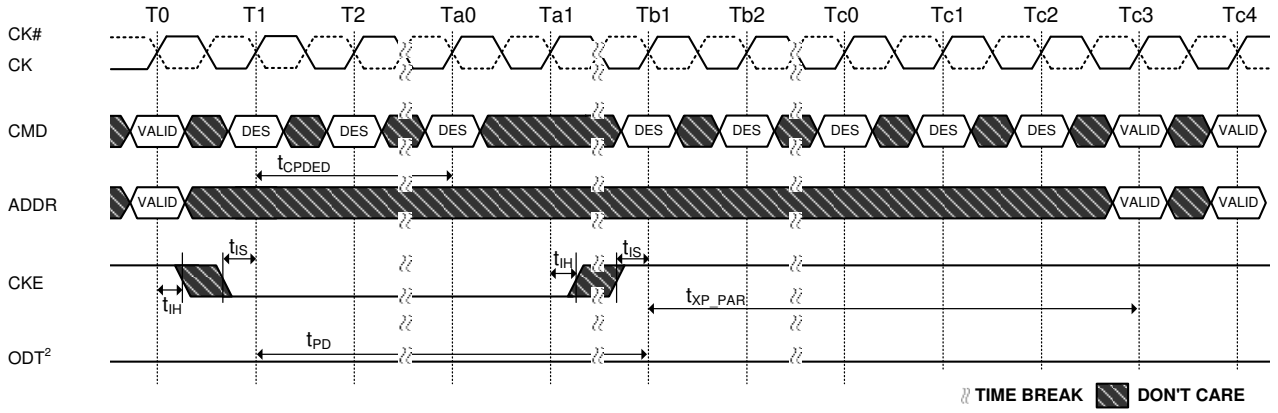

NOTE 1 VALID command at T0 is ACT, DES or Precharge with still one bank remaining open after completion of the precharge command.
NOTE 2 ODT pin driven to a valid state, MR5[A5 = 0] (default setting) is shown
NOTE 3 CA Parity = Enable

Figure 38. Power-Down Entry and Exit Timing with C/A Parity

Table 22. AC Timing Table

Symbol	Parameter	Min.	Max.	Unit
t_{XP_PAR}	Exit Power Down with DLL on to any valid command; Exit Precharge Power Down with DLL frozen to commands not requiring a locked DLL when CA Parity is enabled	max (4nCK,6ns) + PL	-	

Maximum Power Saving Mode

This mode provides lowest power consuming mode which could be similar to the Self-Refresh status with no internal refresh activity. When DDR4 SDRAM is in the maximum power saving mode, it does not need to guarantee data retention nor respond to any external command (except maximum power saving mode exit and asserting RESET# signal LOW) to minimize the power consumption.

Maximum Power-Saving Mode Entry

Max power saving mode is entered through an MRS command. For devices with shared control/address signals, a single DRAM device can be entered into the max power saving mode using the per DRAM Addressability MRS command. Note that large CS# hold time to CKE upon the mode exit may cause DRAM malfunction, thus it is required that the CA parity, CAL are disabled prior to the max power saving mode entry MRS command.

When entering Maximum Power Saving mode, only DES commands are allowed until t_{MPED} is satisfied. After t_{MPED} period from the mode entry command, DRAM is not responsive to any input signals except CS#, CKE and RESET# signals, and all other input signals can be High-Z. CLK should be valid for t_{CKMPE} period and then can be High-Z.

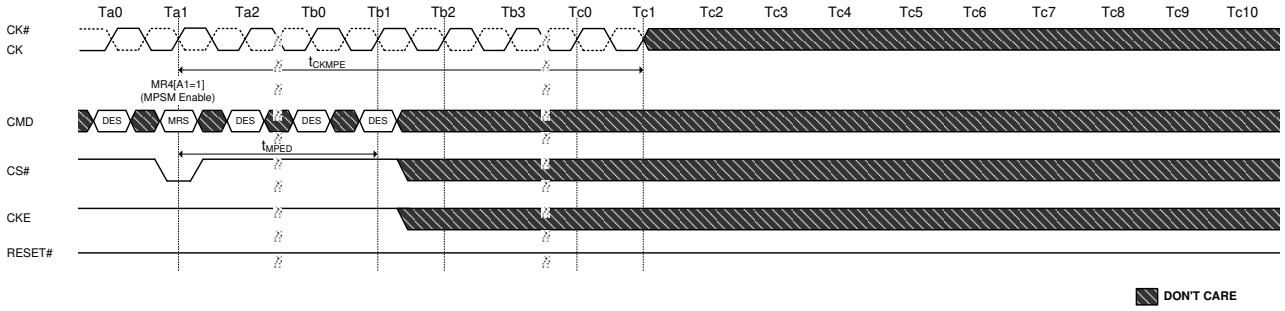

Figure 39. Maximum Power Saving mode Entry

The sequence and timing required for the maximum power-saving mode with the per-DRAM addressability enabled is illustrated in the figure below.

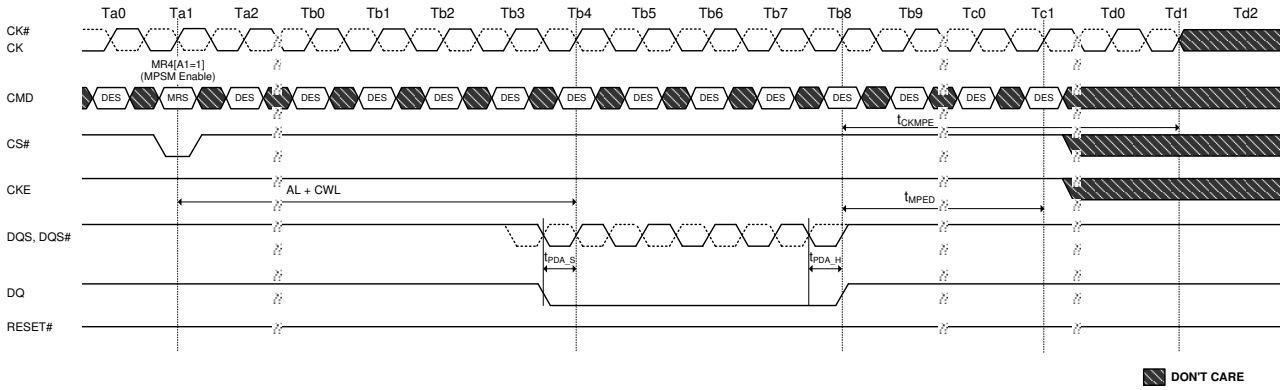

Figure 40. Maximum Power Saving mode Entry with PDA

CKE transition during the mode

CKE toggle is allowed when DRAM is in the maximum power saving mode. To prevent the device from exiting the mode, CS# should be issued 'High' at CKE 'L' to 'H' edge with appropriate setup t_{MPX_S} and hold t_{MPX_HH} timings.

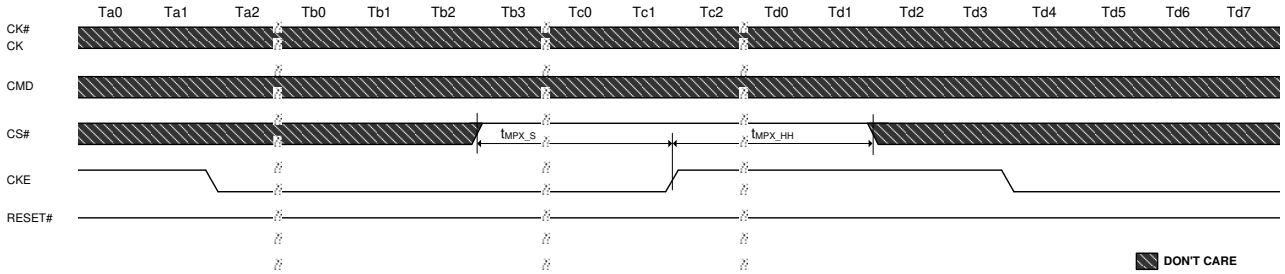

Figure 41. CKE Transition Limitation to hold Maximum Power Saving Mode

Maximum Power-Saving Mode Exit

DRAM monitors CS# signal level and when it detects CKE 'L' to 'H' transition, and either exits from the power saving mode or stay in the mode depending on the CS# signal level at the CKE transition. Because CK receivers are shut down during this mode, CS# = 'L' is captured by rising edge of the CKE signal. If CS# signal level is detected 'L', then the DRAM initiates internal exit procedure from the power saving mode. CK must be restarted and stable t_{CKMPX} period before the device can exit the maximum power saving mode. During the exit time t_{XMP}, any valid commands except DES command is not allowed to DDR4 SDRAM and also t_{XMP_DLL}, any valid commands requiring a locked DLL is not allowed to DDR4 SDRAM.

When recovering from this mode, the DRAM clears the MRS bits of this mode. It means that the setting of MR4 [A1] is move to '0' automatically.

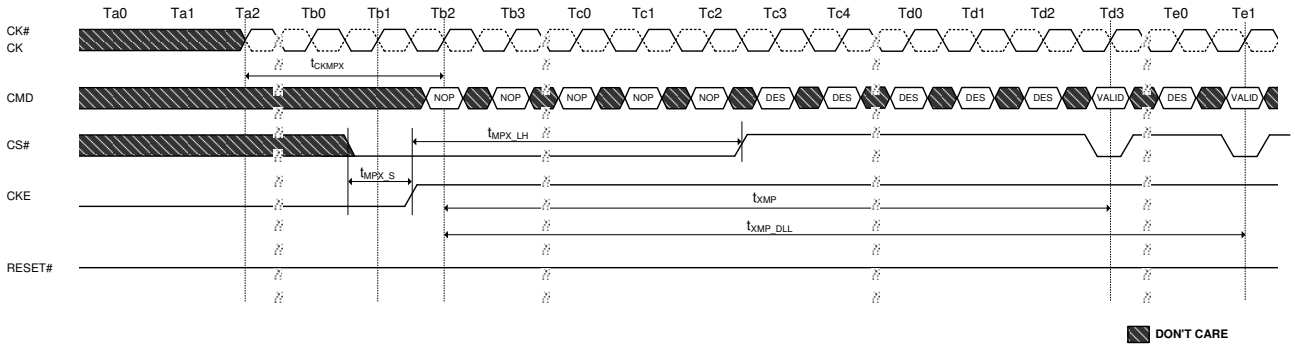

Figure 42. Maximum Power Saving Mode Exit Sequence

Table 23. Timing parameter bin of Maximum Power Saving Mode

Symbol	Parameter	DDR4-2666/3200		Unit
		Min.	Max.	
t_{MPED}	Command path disable delay upon MPSM entry	$t_{MOD(min)} + t_{CPDED(min)}$	-	
t_{CKMPE}	Valid clock requirement after MPSM entry	$t_{MOD(min)} + t_{CPDED(min)}$	-	
t_{CKMPX}	Valid clock requirement before MPSM exit	$t_{CKSRX(min)}$	-	
t_{XMP}	Exit MPSM to commands not requiring a locked DLL	$t_{XS(min)}$	-	
t_{XMPDLL}	Exit MPSM to commands requiring a locked DLL	$t_{XMP(min)} + t_{XSDLL(min)}$	-	
t_{MPX_S}	CS# setup time to CKE	$t_{IS(min)} + t_{IH(min)}$	-	
t_{MPX_HH}	CS# High hold time to CKE rising edge	$t_{XP(min)}$	-	
t_{MPX_LH}[1]	CS# Low hold time to CKE rising edge	12	t_{XMP} - 10ns	ns

Note:
1. $t_{MPX_LH(max)}$ is defined with respect to actual t_{XMP} in system as opposed to $t_{XMP(min)}$.

Control Gear-down Mode

The following description represents the sequence for the gear-down mode which is specified with MR3 A[3]. This mode is allowed just during initialization and self refresh exit. The DRAM defaults in 1/2 rate (1N) clock mode and utilizes a low frequency MRS command followed by a sync pulse to align the proper clock edge for operating the control lines CS#, CKE and ODT in 1/4rate(2N) mode. For operation in 1/2 rate mode MRS command for geardown or sync pulse are not required. DRAM defaults in 1/2 rate mode.

General sequence for operation in geardown during initialization
- DRAM defaults to a 1/2 rate (1N mode) internal clock at power up/reset
- Assertion of Reset
- Assertion of CKE enables the DRAM
- MRS is accessed with a low frequency N x t_{CK} geardown MRS command. (Nt_{CK} static MRS command qualified by 1N CS#)
- DRAM controller sends 1N sync pulse with a low frequency N x t_{CK} NOP command. t_{SYNC_GEAR} is an even number of clocks. The sync pulse on even clock boundary from MRS command.
- Initialization sequence, including the expiration of t_{DLLK} and t_{ZQinit}, starts in 2N mode after t_{CMD_GEAR} from 1N Sync Pulse.

General sequence for operation in gear-down after self refresh exit
- DRAM reset to 1N mode during self refresh
- MRS is accessed with a low frequency N x t_{CK} gear-down MRS command. (Nt_{CK} static MRS command qualified by 1N CS# which meets t_{XS} or t_{XS_Abort} Only Refresh command is allowed to be issued to DRAM before Nt_{CK} static MRS command.
- DRAM controller sends 1N sync pulse with a low frequency N x t_{CK} NOP command. t_{SYNC_GEAR} is an even number of clocks Sync pulse is on even clock boundary from MRS command.
- Valid command not requiring locked DLL is available in 2N mode after t_{CMD_GEAR} from 1N Sync Pulse.
- Valid command requiring locked DLL is available in 2N mode after t_{DLLK} from 1N Sync Pulse.

If operation is 1/2 rate(1N) mode after self refresh, no N x t_{CK} MRS command or sync pulse is required during self refresh exit. The min exit delay is t_{XS} or t_{XS_Abort} to the first valid command.

The DRAM may be changed from 1/4 rate (2N) to 1/2 rate (1N) by entering Self Refresh Mode, which will reset to 1N automatically. Changing from 1/4 (2N) to 1/2 rate (1 N) by any other means, including setting MR3[A3] from 1 to 0, can result in loss of data and operation of the DRAM uncertain.

For the operation of geardown mode in 1/4 rate, the following MR settings should be applied.
CAS Latency (MR0 A[6:4,2]) : Even number of clocks
Write Recovery and Read to Precharge (MR0 A[11:9]) : Even number of clocks
Additive Latency (MR1 A[4:3]) : 0, CL -2
CAS Write Latency (MR2 A[5:3]) : Even number of clocks
CS to Command/Address Latency Mode (MR4 A[8:6]): Even number of clocks
CA Parity Latency Mode (MR5 A[2:0]) : Even number of clocks

CAL or CA parity mode must be disabled prior to Gear down MRS command. They can be enabled again after t_{SYNC_GEAR} and t_{CMD_GEAR} periods are satisfied.

The diagram below illustrates the sequence for control operation in 2N mode during initialization.

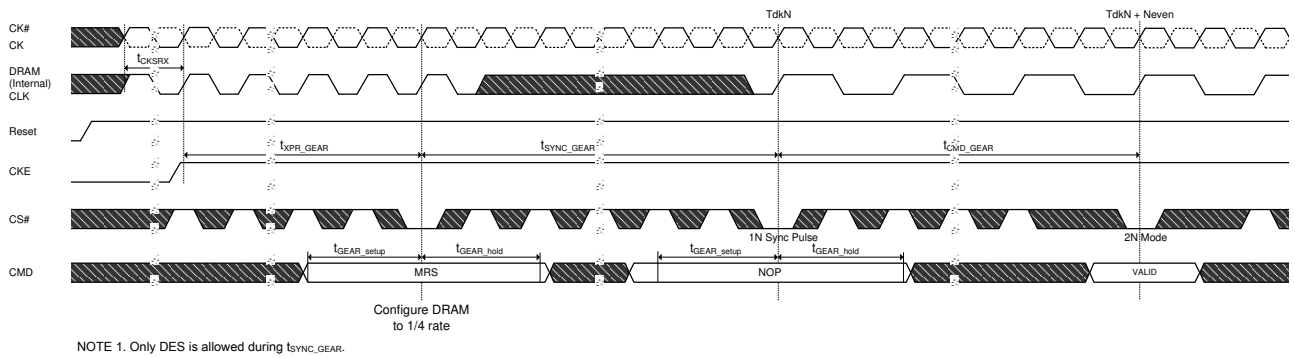

Figure 43. Gear down (2N) mode entry sequence during initialization

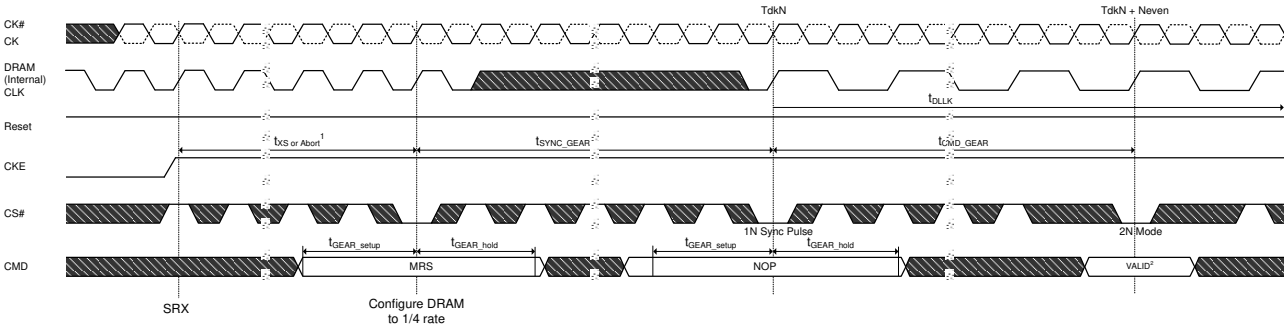

NOTE 1. CKE High Assert to Gear Down Enable Time (t_{XS}, t_{XS_Abort}) depend on MR setting. A correspondence of t_{XS}/t_{XS_Abort} and MR Setting is as follows.
- MR4[A9] = 0 : t_{XS}
- MR4[A9] = 1 : t_{XS_Abort}

NOTE 2. Command not requiring locked DLL
NOTE 3. Only DES is allowed during t_{SYNC_GEAR}

Figure 44. Gear down (2N) mode entry sequence after self refresh exit (SRX)

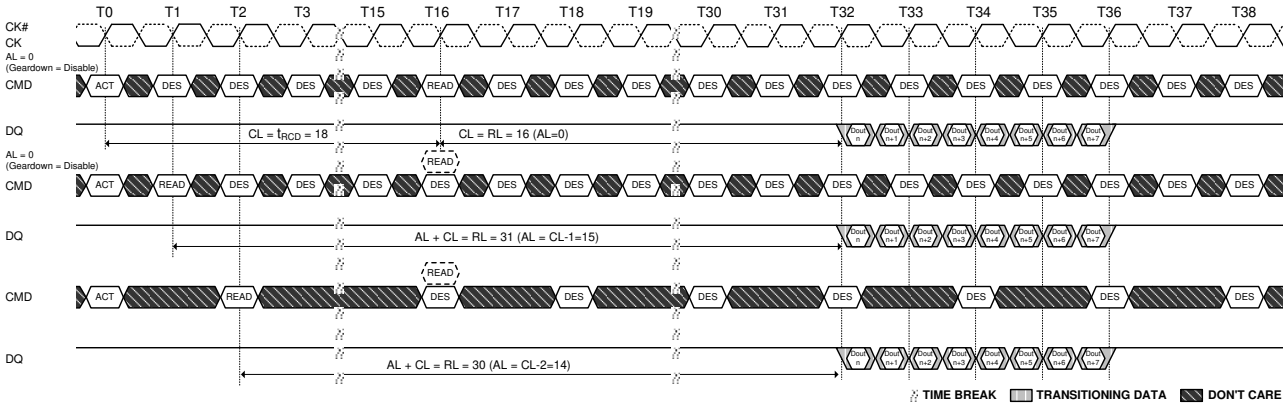

NOTE 1. BL = 8, t_{RCD} = CL = 16
NOTE 2. D_{OUT} n = data-out from column n.
NOTE 3. DES commands are shown for ease of illustration; other commands may be valid at these times.
NOTE 4. CA Parity = Disable, CS to CA Latency = Disable, Read DBI = Disable.

Figure 45. Comparison Timing Diagram Between Geardown Disable and Enable

Refresh Command

The Refresh command (REF) is used during normal operation of the device. This command is non persistent, so it must be issued each time a refresh is required. The device requires Refresh cycles at an average periodic interval of t_{REFI}. When CS#, RAS#/A16 and CAS#/A15 are held Low and WE#/A14 and ACT# are held High at the rising edge of the clock, the device enters a Refresh cycle. All banks of the SDRAM must be precharged and idle for a minimum of the precharge time $t_{RP(min)}$ before the Refresh Command can be applied. The refresh addressing is generated by the internal refresh controller. This makes the address bits "Don't Care" during a Refresh command. An internal address counter supplies the addresses during the refresh cycle. No control of the external address bus is required once this cycle has started. When the refresh cycle has completed, all banks of the SDRAM will be in the precharged (idle) state. A delay between the Refresh Command and the next valid command, except DES, must be greater than or equal to the minimum Refresh cycle time $t_{RFC(min)}$. The t_{RFC} timing parameter depends on memory density.

In general, a Refresh command needs to be issued to the device regularly every t_{REFI} interval. To allow for improved efficiency in scheduling and switching between tasks, some flexibility in the absolute refresh interval is provided for postponing and pulling-in refresh command. A maximum of 8 Refresh commands can be postponed when the device is in 1X refresh mode; a maximum of 16 Refresh commands can be postponed when the device is in 2X refresh mode; and a maximum of 32 Refresh commands can be postponed when the device is in 4X refresh mode.

When 8 consecutive Refresh commands are postponed, the resulting maximum interval between the surrounding Refresh commands is limited to 9 × t_{REFI}. For both the 2X and 4X refresh modes, the maximum interval between surrounding Refresh commands allowed is limited to 17 × $t_{REFI}2$ and 33 × $t_{REFI}4$, respectively.

A limited number Refresh commands can be pulled-in as well. A maximum of 8 additional Refresh commands can be issued in advance or "pulled-in" in 1X refresh mode, a maximum of 16 additional Refresh commands can be issued when in advance in 2X refresh mode, and a maximum of 32 additional Refresh commands can be issued in advance when in 4X refresh mode. Each of these Refresh commands reduces the number of regular Refresh commands required later by one. Note that pulling in more than the maximum allowed Refresh commands in advance does not further reduce the number of regular Refresh commands required later, so that the resulting maximum interval between two surrounding Refresh commands is limited to 9 × t_{REFI}, 17 × $t_{RFEI}2$, or 33 × $t_{REFI}4$. At any given time, a maximum of 16 additional REF commands can be issued within 2 × t_{REFI}, 32 additional REF2 commands can be issued within 4 × $t_{REFI}2$, and 64 additional REF4 commands can be issued within 8 × $t_{REFI}4$ (larger densities are limited by $t_{RFC}1$, $t_{RFC}2$, and $t_{RFC}4$, respectively, which must still be met).

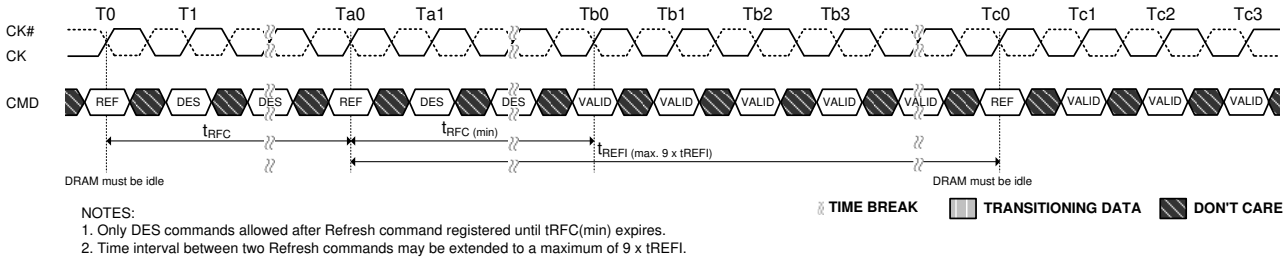

Figure 46. Refresh Command Timing (Example of 1x Refresh mode)

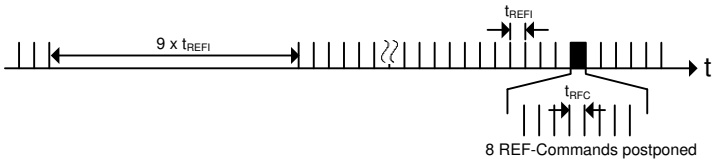

Figure 47. Postponing Refresh Commands (Example of 1X Refresh mode)

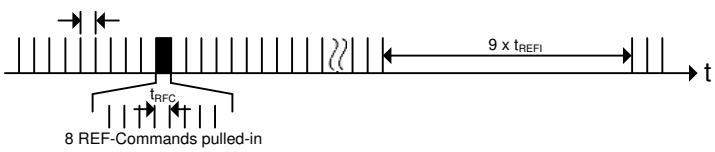

Figure 48. Pulling-in Refresh Commands (Example of 1X Refresh mode)

Data Mask (DM), Data Bus Inversion (DBI) and TDQS

DDR4 SDRAM supports Data Mask (DM) function and Data Bus Inversion (DBI) function in x8 configuration. x8 DDR4 SDRAM supports TDQS function.

DM, DBI & TDQS functions are supported with dedicated one pin labeled as DM#/DBI#/TDQS. The pin is bi-directional pin for DRAM. The DM#/DBI# pin is Active Low as DDR4 supports V_{DDQ} reference termination. TDQS function does not drive actual level on the pin.

DM, DBI & TDQS functions are programmable through DRAM Mode Register (MR). The MR bit location is bit A11 in MR1 and bit A12:A10 in MR5.

Write operation: Either DM or DBI function can be enabled but both functions cannot be enabled simultanteously. When both DM and DBI functions are disabled, DRAM turns off its input receiver and does not expect any valid logic level.

Read operation: Only DBI function applies. When DBI function is disabled, DRAM turns off its output driver and does not drive any valid logic level.

TDQS function: When TDQS function is enabled, DM & DBI functions are not supported. When TDQS function is disabled, DM and DBI functions are supported as described below. When enabled, the same termination resistance function is applied to the TDQS/TDQS# pins that is applied to DQS/DQS# pins.

Table 24. TDQS Function Matrix

TDQS (MR1 bit A11)	DM (MR5 bit A10)	Write DBI (MR5 bit A11)	Read DBI (MR5 bit A12)
0 (TDQS Disabled)	Enabled	Disabled	Enabled or Disabled
	Disabled	Enabled	Enabled or Disabled
	Disabled	Disabled	Enabled or Disabled
1 (TDQS Enabled)	Disabled	Disabled	Disabled

DM function during Write operation: DRAM masks the write data received on the DQ inputs if DM# was sampled Low on a given byte lane. If DM# was sampled High on a given byte lane, DRAM does not mask the write data and writes into the DRAM core.

DBI function during Write operation: DRAM inverts write data received on the DQ inputs if DBI# was sampled Low on a given byte lane. If DBI# was sampled High on a given byte lane, DRAM leaves the data received on the DQ inputs non-inverted.

DBI function during Read operation: DRAM inverts read data on its DQ outputs and drives DBI# pin Low when the number of ‘0’ data bits within a given byte lane is greater than 4; otherwise DRAM does not invert the read data and drives DBI# pin High.

Table 25. DQ Frame Format

Write	Data transfer							
	0	1	2	3	4	5	6	7
DQ[7:0]	Byte 0	Byte 1	Byte 2	Byte 3	Byte 4	Byte 5	Byte 6	Byte 7
DM# or DBI#	DM0 or DBI0	DM1 or DBI1	DM2 or DBI2	DM3 or DBI3	DM4 or DBI4	DM5 or DBI5	DM6 or DBI6	DM7 or DBI7
Read	**Data transfer**							
	0	**1**	**2**	**3**	**4**	**5**	**6**	**7**
DQ[7:0]	Byte 0	Byte 1	Byte 2	Byte 3	Byte 4	Byte 5	Byte 6	Byte 7
DBI#	DBI0	DBI1	DBI2	DBI3	DBI4	DBI5	DBI6	DBI7

ZQ Calibration Commands

ZQ Calibration command is used to calibrate DRAM R_{ON} & ODT values. The device needs longer time to calibrate output driver and on-die termination circuits at initialization and relatively smaller time to perform periodic calibrations.

ZQCL command is used to perform the initial calibration during power-up initialization sequence. This command may be issued at any time by the controller depending on the system environment. ZQCL command triggers the calibration engine inside the DRAM and, once calibration is achieved, the calibrated values are transferred from the calibration engine to DRAM IO, which gets reflected as updated output driver and on-die termination values.

The first ZQCL command issued after reset is allowed a timing period of t_{ZQinit} to perform the full calibration and the transfer of values. All other ZQCL commands except the first ZQCL command issued after reset are allowed a timing period of t_{ZQoper}.

ZQCS command is used to perform periodic calibrations to account for voltage and temperature variations. A shorter timing window is provided to perform the calibration and transfer of values as defined by timing parameter t_{ZQCS}. One ZQCS command can effectively correct a minimum of 0.5 % (ZQ Correction) of R_{ON} and R_{TT} impedance error within 128 nCK for all speed bins assuming the maximum sensitivities specified in the Output Driver Voltage and ODT Voltage and Temperature Sensitivity tables. The appropriate interval between ZQCS commands can be determined from these tables and other application specific parameters. One method for calculating the interval between ZQCS commands, given the temperature ($T_{driftrate}$) and voltage ($V_{driftrate}$) drift rates that the device is subject to in the application, is illustrated. The interval could be defined by the following formula:

$$\frac{\text{ZQCorrection}}{(\text{Tsens} \times \text{Tdriftrate}) + (\text{Vsens} \times \text{Vdriftrate})}$$

Where T_{sens} = max ($dR_{TT}dT$, $dR_{ON}dTM$) and V_{sens} = max ($dR_{TT}dV$, $dR_{ON}dVM$) define temperature and voltage sensitivities.

For example, if T_{sens} = 1.5%/°C, V_{sens} = 0.15%/mV, $T_{driftrate}$ = 1°C/sec and $V_{driftrate}$ = 15mV/sec, then the interval between ZQCS commands is calculated as:

$$\frac{0.5}{(1.5 \times 1) + (0.15 \times 15)} = 0.133 \approx 128\text{ms}$$

No other activities should be performed on the DRAM channel by the controller for the duration of t_{ZQinit}, t_{ZQoper}, or t_{ZQCS}. The quiet time on the DRAM channel allows accurate calibration of output driver and on-die termination values. Once DRAM calibration is achieved, the device should disable ZQ current consumption path to reduce power.

All banks must be precharged and t_{RP} met before ZQCL or ZQCS commands are issued by the controller. See “Command Truth Table” on Section 4.1 for a description of the ZQCL and ZQCS commands.

ZQ calibration commands can also be issued in parallel to DLL lock time when coming out of self refresh. Upon Self-Refresh exit, the device will not perform an IO calibration without an explicit ZQ calibration command. The earliest possible time for ZQ Calibration command (short or long) after self refresh exit is t_{XS}, t_{XS_Abort}/ t_{XS_FAST} depending on operation mode.

In systems that share the ZQ resistor between devices, the controller must not allow any overlap of t_{ZQoper}, t_{ZQinit}, or t_{ZQCS} between the devices.

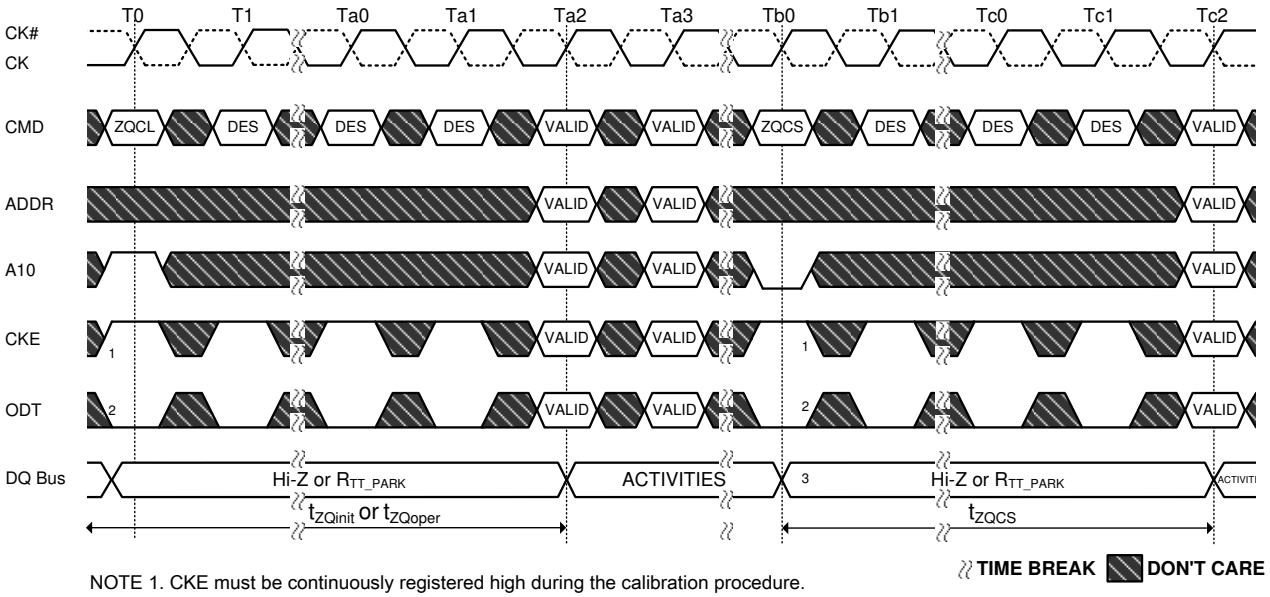

NOTE 1. CKE must be continuously registered high during the calibration procedure.
NOTE 2. During ZQ Calibration, ODT signal must be held LOW and DRAM continues to provide R_{TT_PARK}.
NOTE 3. All devices connected to the DQ bus should be high impedance or R_{TT_PARK} during the calibration procedure.

Figure 49. ZQ Calibration Timing

DQ V_{REF} Training

The DRAM internal DQ V_{REF} specification parameters are operating voltage range, stepsize, V_{REF} step time, V_{REF} full step time and V_{REF} valid level.

The voltage operating range specifies the minimum required V_{REF} setting range for DDR4 DRAM devices. The minimum range is defined by V_{REFmax} and V_{REFmin} as depicted in the following figure.

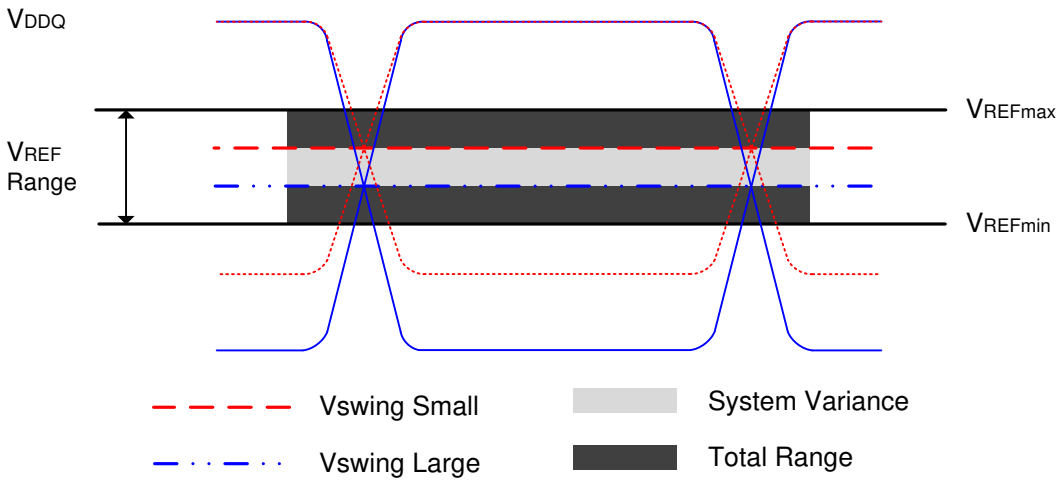

Figure 50. V_{REFDQ} Operating Range (V_{REFmin}, V_{REFmax})

The V_{REF} stepsize is defined as the stepsize between adjacent steps. V_{REF} stepsize ranges from 0.5% V_{DDQ} to 0.8% V_{DDQ}. However, for a given design, DRAM has one value for V_{REF} step size that falls within the range.

The V_{REF} set tolerance is the variation in the V_{REF} voltage from the ideal setting. This accounts for accumulated error over multiple steps. There are two ranges for V_{REF} set tolerance uncertainty. The range of V_{REF} set tolerance uncertainty is a function of number of steps n.

The V_{REF} set tolerance is measured with respect to the ideal line which is based on the two endpoints. Where the endpoints are at the min and max V_{REF} values for a specified range. An illustration depicting an example of the stepsize and V_{REF} set tolerance is below.

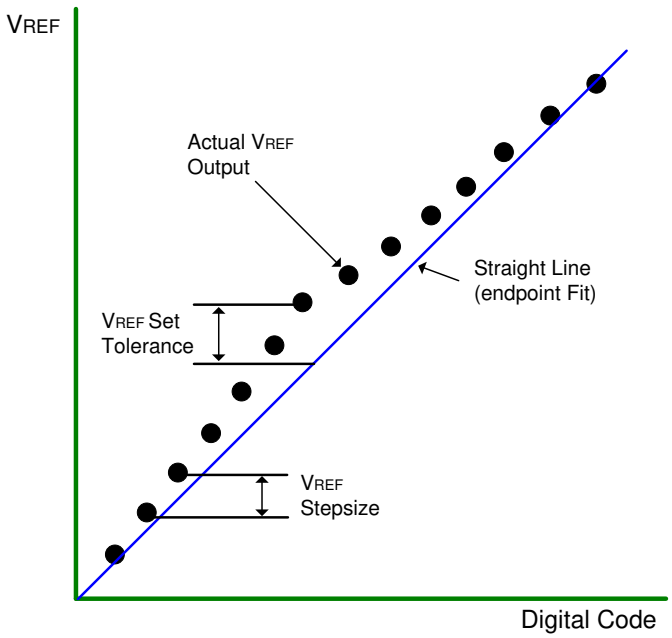

Figure 51. Example of V_{REF} set tolerance (max case only shown) and stepsize

The V_{REF} increment/decrement step times are defined by V_{REF_time}. The V_{REF_time} is defined from t0 to t1, where t1 is referenced to when the V_{REF} voltage is at the final DC level within the V_{REF} valid tolerance ($V_{REF_val_tol}$).

The V_{REF} valid level is defined by V_{REF_val} tolerance to qualify the step time t1. This parameter is used to insure an adequate RC time constant behavior of the voltage level change after any Vref increment/decrement adjustment. This parameter is only applicable for DRAM component level validation/characterization.

V_{REF_time} is the time including up to V_{REFmin} to V_{REFmax} or V_{REFmax} to V_{REFmin} change in V_{REF} voltage.

t0 - is referenced to MRS command clock
t1 - is referenced to the $V_{REF_val_tol}$

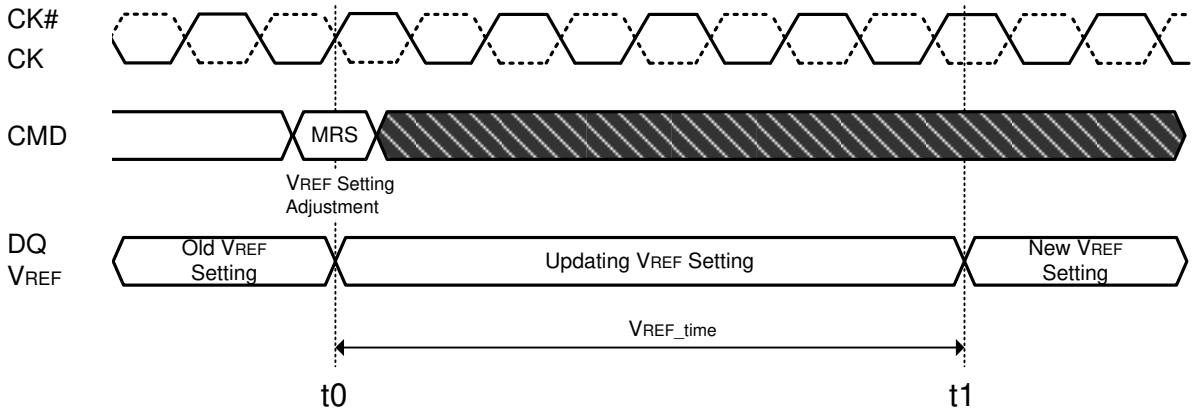

Figure 52. V_{REF_time} timing diagram

V_{REFDQ} Calibration Mode is entered via MRS command setting MR6 A[7] to 1 (0 disables V_{REFDQ} Calibration Mode), and setting MR6 A[6] to either 0 or 1 to select the desired range, and MR6 A[5:0] with a "don't care" setting (there is no default initial setting; whether V_{REFDQ} training value (MR6 A[5:0]) at training mode entry with MR6 A[7] = 1 is captured by the DRAM or not is vendor specific). The next subsequent MR command is used to set the desired V_{REFDQ} values at MR6 A[5:0]. Once V_{REFDQ} Calibration Mode has been entered, V_{REFDQ} Calibration Mode legal commands may be issued once $t_{VREFDQE}$ has been satisfied. V_{REFDQ} Calibration Mode legal commands are ACT, WR, WRA, RD, RDA, PRE, DES, MRS to set V_{REFDQ} values, and MRS to exit V_{REFDQ} Calibration Mode. Once V_{REFDQ} Calibration Mode has been entered, "dummy" write commands may be issued prior to adjusting V_{REFDQ} value the first time V_{REFDQ} calibration is performed after initialization. The "dummy" write commands may have bubbles between write commands provided other DRAM timings are satisfied. A possible example command sequence would be: WR1, DES, DES, DES, WR2, DES, DES, DES, WR3, DES, DES, DES, WR4, DES, DES…….DES, DES, WR50, DES, DES, DES. Setting V_{REFDQ} values requires MR6 [7] set to 1, MR6 [6] unchanged from initial range selection, and MR6 A[5:0] set to desired V_{REFDQ} value; if MR6 [7] is set to 0, MR6 [6:0] are not written. V_{REF_time} must be satisfied after each MR6 command to set V_{REFDQ} value before the internal V_{REFDQ} value is valid.

If PDA mode is used in conjunction with V_{REFDQ} calibration, the PDA mode requirement that only MRS commands are allowed while PDA mode is enabled is not waived. That is, the only V_{REFDQ} Calibration Mode legal commands noted above that may be used are the MRS commands, i.e. MRS to set V_{REFDQ} values, and MRS to exit V_{REFDQ} Calibration Mode.

The last A [6:0] setting written to MR6 prior to exiting V_{REFDQ} Calibration Mode is the range and value used for the internal V_{REFDQ} setting. V_{REFDQ} Calibration Mode may be exited when the DRAM is in idle state. After the MRS command to exit V_{REFDQ} Calibration Mode has been issued, DES must be issued till $t_{VREFDQX}$ has been satisfied where any legal command may then be issued.

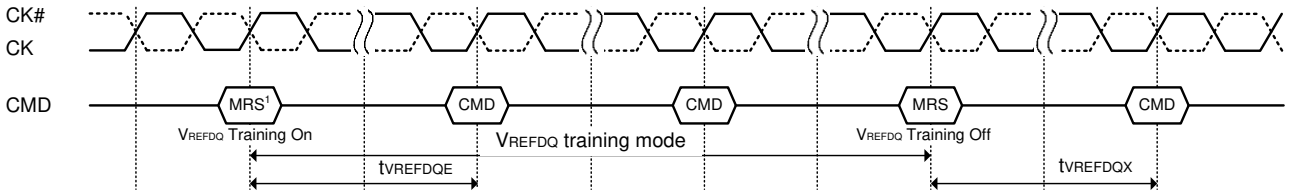

NOTE 1. The MR command used to enter V_{REFDQ} Calibration Mode treats MR6 A [5:0] as don't care while the next subsequent MR command sets V_{REFDQ} values in MR6 A[5:0] .
NOTE 2. Depending on the step size of the latest programmed V_{REF} value, V_{REF_time} must be satisfied before disabling V_{REFDQ} training mode.

Figure 53. V_{REFDQ} training mode entry and exit timing diagram

Table 26. AC parameters of V_{REFDQ} training

Symbol	Parameter	Min.	Max.	Unit
$t_{VREFDQE}$	Enter V_{REFDQ} training mode to the first valid command delay	150	-	ns
$t_{VREFDQX}$	Exit V_{REFDQ} training mode to the first valid command delay	150	-	ns

Example scripts for V_{REFDQ} Calibration Mode

When MR6 [7] = 0 then MR6 [6:0] = XXXXXXX

Entering V_{REFDQ} Calibration if entering range 1:

- MR6 [7:6] = 10 & [5:0] = XXXXXX
- All subsequent V_{REFDQ} Calibration MR setting commands are MR6 [7:6] = 10 & MR6 [5:0] = VVVVVV
  - {VVVVVV are desired settings for V_{REFDQ}}
- Issue ACT/WR/RD looking for pass/fail to determine V_{CENT}(midpoint) as needed
- Just prior to exiting V_{REFDQ} Calibration mode:
- Last two V_{REFDQ} Calibration MR commands are
- MR6 [7:6] = 10, MR6 [5:0] = VVVVVV' where VVVVVV' = desired value for V_{REFDQ}
- MR6 [7] = 0, MR6 [6:0] = XXXXXXX to exit V_{REFDQ} Calibration mode

Entering V_{REFDQ} Calibration if entering range 2:

- MR6 [7:6] = 11 & [5:0] = XXXXXX
- All subsequent V_{REFDQ} Calibration MR setting commands are MR6 [7:6]=11 & MR6 [5:0]=VVVVVV
  - {VVVVVV are desired settings for V_{REFDQ}}
- Issue ACT/WR/RD looking for pass/fail to determine V_{CENT}(midpoint) as needed
- Just prior to exiting V_{REFDQ} Calibration mode:
- Last two V_{REFDQ} Calibration MR commands are
- MR6 [7:6] = 11, MR6 [5:0] = VVVVVV' where VVVVVV' = desired value for V_{REFDQ}
- MR6 [7] = 0, MR6 [6:0] = XXXXXXX to exit V_{REFDQ} Calibration mode

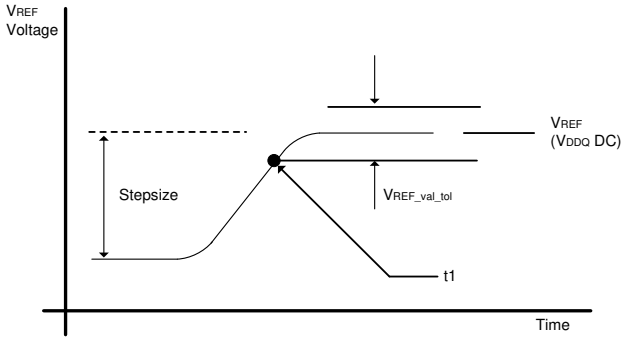

Figure 54. V_{REF} step single stepsize increment case

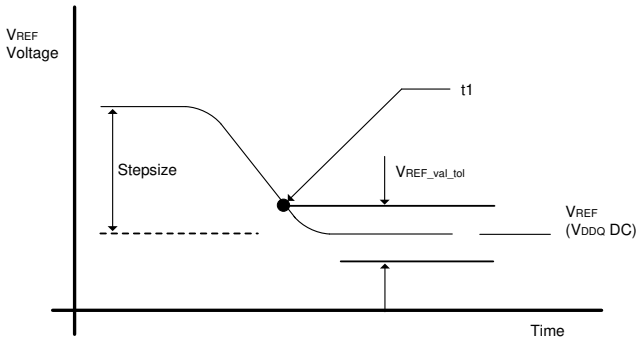

Figure 55. V_{REF} step single stepsize decrement case

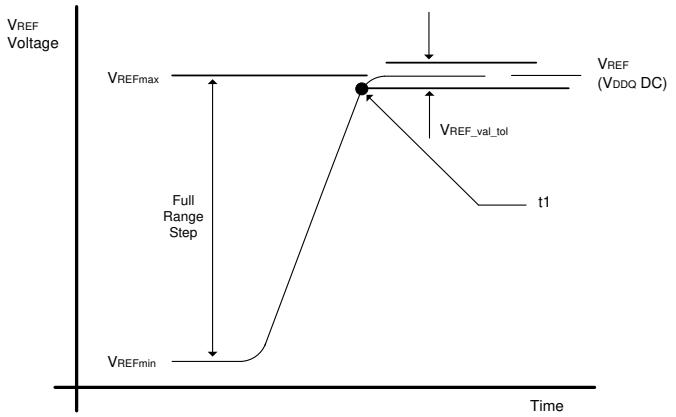

Figure 56. V_{REF} full step from V_{REFmin} to V_{REFmax} case

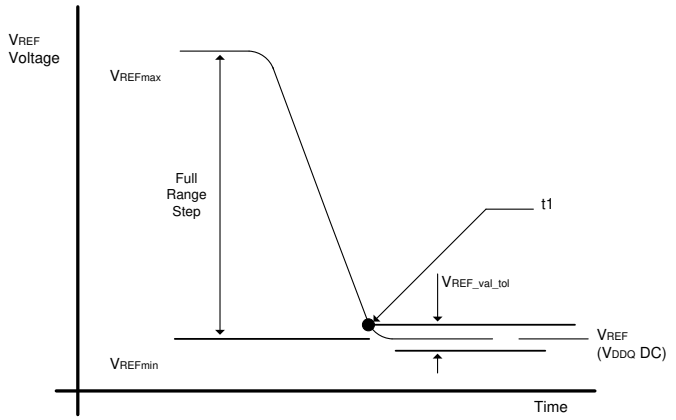

Figure 57. V_{REF} full step from V_{REFmax} to V_{REFmin} case

Table 27. DQ Internal V_{REF} Specifications

Symbol	Parameter	Min.	Typ.	Max.	Unit	Note
VREF_max_R1	V_{REF} max operating point range1	92%	-	-	V_{DDQ}	1,10
VREF_min_R1	V_{REF} min operating point range1	-	-	60%	V_{DDQ}	1,10
VREF_max_R2	V_{REF} max operating point range2	77%	-	-	V_{DDQ}	1,10
VREF_min_R2	V_{REF} min operating point range2	-	-	45%	V_{DDQ}	1,10
VREF step	V_{REF} Stepsize	0.50%	0.65%	0.80%	V_{DDQ}	2
VREF_set_tol	V_{REF} Set Tolerance	-1.625%	0.00%	1.625%	V_{DDQ}	3,4,6
		-0.15%	0.00%	0.15%	V_{DDQ}	3,5,7
VREF_time	V_{REF} Step Time	-	-	150	ns	8,11
VREF_val_tol	V_{REF} Valid tolerance	-0.15%	0.00%	0.15%	V_{DDQ}	9

Note 1. V_{REF} DC voltage referenced to V_{DDQ_DC}. V_{DDQ_DC} is 1.2V.
Note 2. V_{REF} stepsize increment/decrement range. V_{REF} at DC level.
Note 3. $V_{REF_new} = V_{REF_old} + n \times V_{REF_step}$; n = number of step; if increment use "+"; If decrement use "-".
Note 4. The minimum value of V_{REF} setting tolerance = V_{REF_new} - 1.625% x V_{DDQ}. The maximum value of V_{REF} setting tolerance = V_{REF_new} + 1.625% x V_{DDQ} for n>4.
Note 5. The minimum value of V_{REF} setting tolerance = V_{REF_new} - 0.15% x V_{DDQ}. The maximum value of V_{REF} setting tolerance = V_{REF_new} + 0.15% x V_{DDQ} for n>4.
Note 6. Measured by recording the min and max values of the V_{REF} output over the range, drawing a straight line between those points and comparing all other V_{REF} output settings to that line.
Note 7. Measured by recording the min and max values of the V_{REF} output across 4 consecutive steps (n = 4), drawing a straight line between those points and comparing all other V_{REF} output settings to that line.
Note 8. Time from MRS command to increment or decrement one step size up to full range of V_{REF}.
Note 9. Only applicable for DRAM component level test/characterization purpose. Not applicable for normal mode of operation. V_{REF} valid is to qualify the step times which will be characterized at the component level.
Note 10. DRAM range1 or 2 set by MRS bit MR6, A6.
Note 11. If the V_{REF} monitor is enabled, V_{REF_time} must be derated by: +10ns if DQ load is 0pF and an additional +15ns/pF of DQ loading.

Per DRAM Addressability

DDR4 allows programmability of a given device on a rank. As an example, this feature can be used to program different ODT or V_{REF} values on DRAM devices on a given rank.

1. Before entering 'per DRAM addressability (PDA)' mode, the write leveling is required.
   - BL8 or BC4 may be used.
2. Before entering 'per DRAM addressability (PDA)' mode, the following Mode Register setting is possible.
   - R_{TT_PARK} MR5 A[8:6] = Enable
   - R_{TT_NOM} MR1 A[10:8] = Enable
3. Enable 'per DRAM addressability (PDA)' mode using MR3 A[4] = 1.
4. In the 'per DRAM addressability' mode, all MRS command is qualified with DQ0. The device captures DQ0 by using DQS signals. If the value on DQ0 is low, the DRAM executes the MRS command. If the value on DQ0 is high, the DRAM ignores the MRS command. The controller can choose to drive all the DQ bits.
5. Program the desired devices and mode registers using MRS command and DQ0.
6. In the 'per DRAM addressability' mode, only MRS commands are allowed.
7. The mode register set command cycle time at PDA mode, AL + CWL + BL/2 - 0.5t_{CK} + t_{MRD_PDA} + (PL) is required to complete the write operation to the mode register and is the minimum time required between two MRS commands.
8. Remove the device from 'per DRAM addressability' mode by setting MR3 A[4] = 0. (This command will require DQ0 = 0)

Note: Removing a device from per DRAM addressability mode will require programming the entire MR3 when the MRS command is issued. This may impact some PDA values programmed within a rank as the exit command is sent to the rank. In order to avoid such a case the PDA Enable/Disable Control bit is located in a mode register that does not have any 'per DRAM addressability' mode controls.

In per DRAM addressability mode, device captures DQ0 using DQS signals the same as in a normal write operation; However, Dynamic ODT is not supported. Extra care required for the ODT setting. If R_{TT_NOM} MR1 A[10:8] = Enable, device data termination need to be controlled by ODT pin and apply the same timing parameters (defined below). V_{REFDQ} value must be set to either its midpoint or V_{cent_DQ} (midpoint) in order to capture DQ0 low level for entering PDA mode.

Table 28. Applied ODT Timing Parameter to PDA Mode

Symbol	Parameter
DODTLon	Direct ODT turn on latency
DODTLoff	Direct ODT turn off latency
t_{ADC}	R_{TT} change timing skew
t_{AONAS}	Asynchronous R_{TT_NOM} turn-on delay
t_{AOFAS}	Asynchronous R_{TT_NOM} turn-off delay

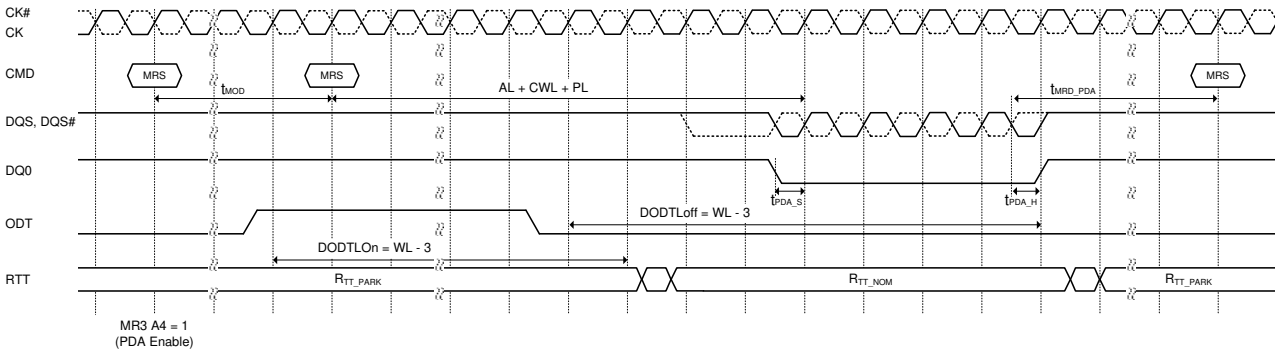

NOTE: R_{TT_PARK} = Enable, R_{TT_NOM} = Enable, Write Preamble Set = 2 t_{CK} and DLL = ON, CA parity is used.

Figure 58. MRS w/ per DRAM addressability (PDA) issuing before MRS

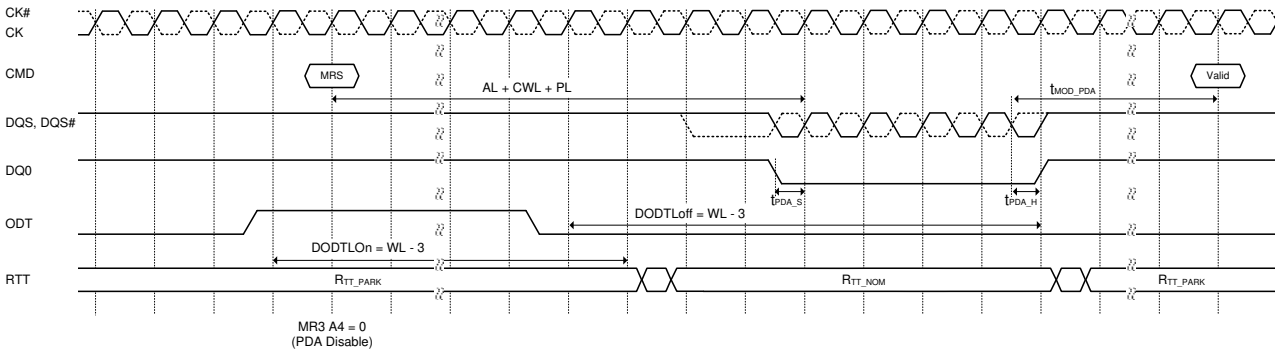

NOTE: R_{TT_PARK} = Enable, R_{TT_NOM} = Enable, Write Preamble Set = 2 t_{CK} and DLL = ON, CA parity is used.

Figure 59. MRS w/ per DRAM addressability (PDA) Exit

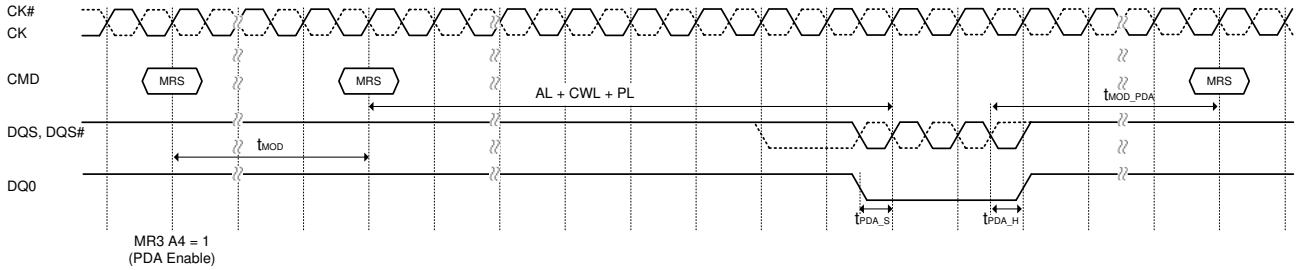

NOTE: CA parity is used.

Figure 60. PDA using Burst Chop 4

Since PDA mode may be used to program optimal V_{REF} for the DRAM, the DRAM may incorrectly read DQ level at the first DQS edge and the last falling DQS edge. It is recommended that DRAM samples DQ0 on either the first falling or second rising DQS edges.

This will enable a common implementation between BC4 and BL8 modes on the DRAM. Controller is required to drive DQ0 to a ‘Stable Low or High’ during the length of the data transfer for BC4 and BL8 cases.

Command Address Parity (CA Parity)

[A2:A0] of MR5 are defined to enable or disable C/A Parity in the DRAM. The default state of the C/A Parity bits is disabled. If C/A parity is enabled by programming a non-zero value to C/A Parity Latency in the mode register (the Parity Error bit must be set to zero when enabling C/A any Parity mode), then the DRAM has to ensure that there is no parity error before executing the command. The additional delay for executing the commands versus a parity disabled mode is programmed in the mode register (MR5, A2:A0) when C/A Parity is enabled (PL: Parity Latency) and is applied to commands that are latched via the rising edge of CK when CS# is low. The command is held for the time of the Parity Latency before it is executed inside the device. This means that issuing timing of internal command is determined with PL. When C/A Parity is enabled, only DES is allowed between valid commands to prevent DRAM from any malfunctioning. CA Parity Mode is supported when DLL-on Mode is enabled, use of CA Parity Mode when DLL-off Mode is enabled is not allowed.

C/A Parity signal (PAR) covers ACT#, RAS#/A16, CAS#/A15, WE#/A14 and the address bus including bank address and bank group bits. The control signals CKE, ODT and CS# are not included. (e.g., for a 4 Gbit x8 monolithic device, parity is computed across BG0, BA1, BA0, A16/RAS#, A15/CAS#, A14/WE#, A13-A0 and ACT#). (The DRAM treats any unused address pins internally as zeros; for example, if a common die has stacked pins but the device is used in a monolithic application, then the address pins used for stacking and not connected are treated internally as zeros.)

The convention of parity is even parity i.e. valid parity is defined as an even number of ones across the inputs used for parity computation combined with the parity signal. In other words the parity bit is chosen so that the total number of 1's in the transmitted signal, including the parity bit is even.

If a DRAM detects a C/A parity error in any command as qualified by CS# then it must perform the following steps:

- Ignore the erroneous command. Commands in max NnCK window ($t_{PAR_UNKNOWN}$) prior to the erroneous command are not guaranteed to be executed. When a Read command in this NnCK window is not executed, the DRAM does not activate DQS outputs.
- Log the error by storing the erroneous command and address bits in the error log.
- Set the Parity Error Status bit in the mode register to 1. The Parity Error Status bit must be set before the ALERT# signal is released by the DRAM (i.e. $t_{PAR_ALERT_ON}$ + $t_{PAR_ALERT_PW(min)}$).
- Assert the ALERT# signal to the host (ALERT# is active low) within $t_{PAR_ALERT_ON}$ time.
- Wait for all in-progress commands to complete. These commands were received t_{PAR_UNKOWN} before the erroneous command. If a parity error occurs on a command issued between the t_{XS_Fast} and t_{XS} window after self-refresh exit then the DRAM may delay the de-assertion of ALERT# signal as a result of any internal ongoing refresh.
- Wait for t_{RAS_min} before closing all the open pages. The DRAM is not executing any commands during the window defined by ($t_{PAR_ALERT_ON}$ + $t_{PAR_ALERT_PW}$).
- After $t_{PAR_ALERT_PW_min}$ has been satisfied, the DRAM may de-assert ALERT#.
- After the device has returned to a known pre-charged state it may de-assert ALERT#.
- After ($t_{PAR_ALERT_ON}$ + $t_{PAR_ALERT_PW}$), the device is ready to accept commands for normal operation. Parity latency will be in effect, however, parity checking will not resume until the memory controller has cleared the Parity Error Status bit by writing a zero. (The DRAM will execute any erroneous commands until the bit is cleared).
- It is possible that the device might have ignored a refresh command during the ($t_{PAR_ALERT_ON}$ + $t_{PAR_ALERT_PW}$) window or the refresh command is the first erroneous frame so it is recommended that the controller issues extra refresh cycles as needed.
- The Parity Error Status bit may be read any time after ($t_{PAR_ALERT_ON}$ + $t_{PAR_ALERT_PW}$) to determine which DRAM had the error. The device maintains the Error Log for the first erroneous command until the Parity Error Status bit is reset to zero.

Mode Register for C/A Parity Error is defined as follows. C/A Parity Latency bits are write only, Parity Error Status bit is read/write and error logs are read only bits. The device controller can only program the Parity Error Status bit to zero. If the DRAM controller illegally attempts to write a '1' to the Parity Error Status bit the DRAM does not guarantee that parity will be checked. The DRAM may opt to block the controller from writing a '1' to the Parity Error Status bit.

DDR4 SDRAM supports MR bit for Persistent Parity Error Mode. This mode is enabled by setting MR5 A[9] = 1 and when it is enabled, DRAM resumes checking CA Parity after the ALERT# is deasserted, even if Parity Error Status bit is set as High. If multiple errors occur before the Error Status bit is cleared the error log in MPR page 1 should be treated as 'Don't Care'. In Persistent Parity Error Mode the ALERT# pulse will be asserted and deasserted by the DRAM as defined with the min. and max. value for $t_{PAR_ALERT_PW}$. The controller must issue Deselect commands once it detects the ALERT# signal, this response time is defined as $t_{PAR_ALERT_RSP}$. The following figure captures the flow of events on the C/A bus and the ALERT# signal.

Table 29. Mode Registers for C/A Parity

C/A Parity Latency MR5[2:0]*	Speed bins	C/A Parity Error Status MR5[4]	Errant C/A Frame
000 = Disabled	-	0 = Clear	ACT#, BG1, BG0, BA0, BA1, PAR, A16/RAS#, A15/CAS#, A14/WE#, A13:A0
001= 4 Clocks	1600,1866,2133		
010= 5 Clocks	2400,2666	1 = Error	
011= 6 Clocks	2933/3200		
100= 8 Clocks	RFU		

Note 1. Parity Latency is applied to all commands.
Note 2. Parity Latency can be changed only from a C/A Parity disabled state, i.e. a direct change from PL= 4 ➞ PL= 5 is not allowed. Correct sequence is PL= 4 ➞ Disabled ➞ PL= 5.
Note 3. Parity Latency is applied to write and read latency. Write Latency = AL+CWL+PL. Read Latency = AL+CL+PL.

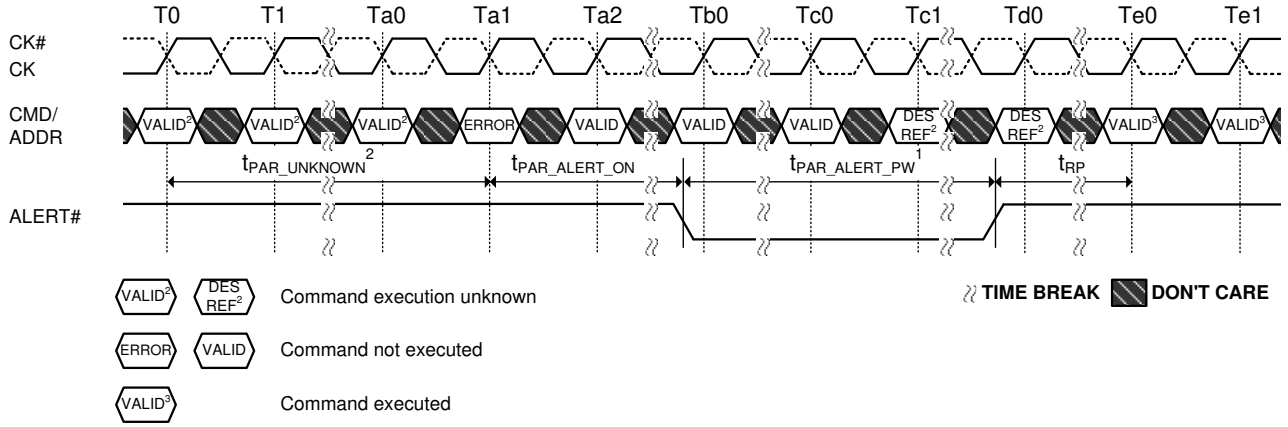

NOTE 1. DRAM is emptying queues, Precharge All and parity checking off until Parity Error Status bit cleared.
NOTE 2. Command execution is unknown the corresponding DRAM internal state change may or may not occur.
The DRAM Controller should consider both cases and make sure that the command sequence meets the specifications.
NOTE 3. Normal operation with parity latency(CA Parity Persistent Error Mode disabled).
Parity checking off until Parity Error Status bit cleared.

Figure 61. Normal CA Parity Error Checking Operation

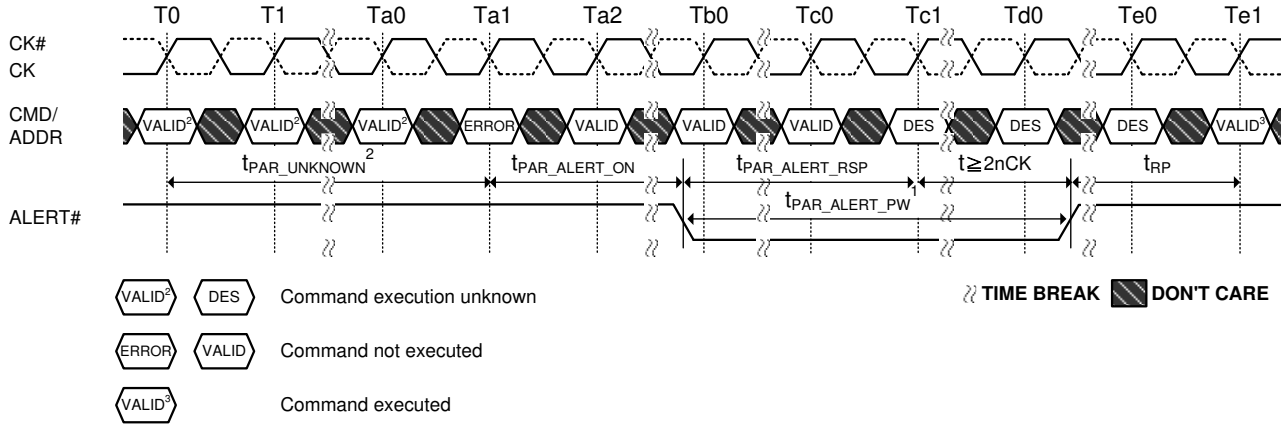

NOTE 1. DRAM is emptying queues, Precharge All and parity check re-enable finished by $t_{PAR_ALERT_PW}$.
NOTE 2. Command execution is unknown the corresponding DRAM internal state change may or may not occur.
The DRAM Controller should consider both cases and make sure that the command sequence meets the specifications.
NOTE 3. Normal operation with parity latency and parity checking (CA Parity Persistent Error Mode enabled).

Figure 62. Persistent CA Parity Error Checking Operation

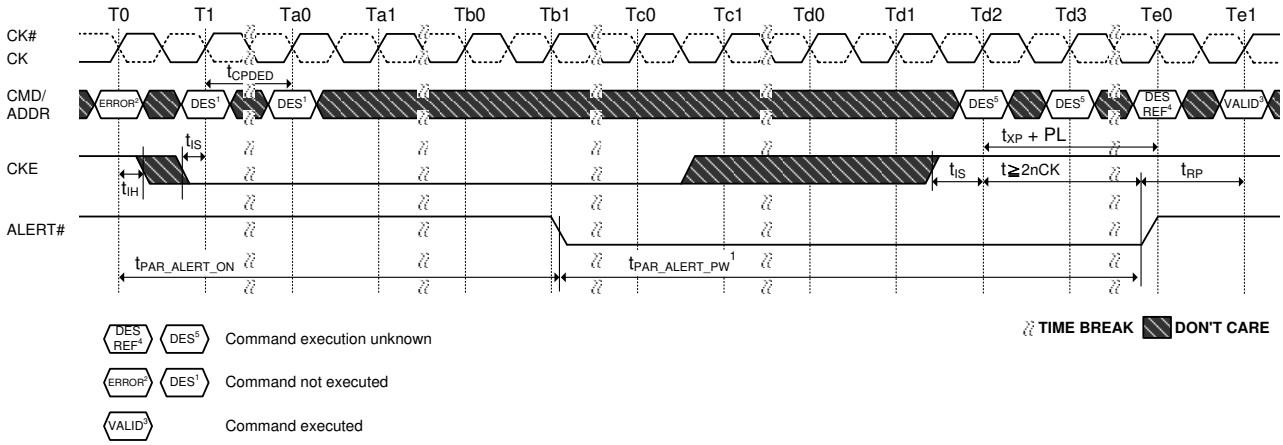

NOTE 1. Deselect command only allowed.
NOTE 2. Error could be Precharge or Activate.
NOTE 3. Normal operation with parity latency (CA Parity Persistent Error Mode disable). Parity checking is off until Parity Error Status bit cleared.
NOTE 4. Command execution is unknown the corresponding DRAM internal state change may or may not occur.
The DRAM Controller should consider both cases and make sure that the command sequence meets the specifications.
NOTE 5. Deselect command only allowed CKE may go high prior to Td2 as long as DES commands are issued.

Figure 63. CA Parity Error Checking - PDE/PDX

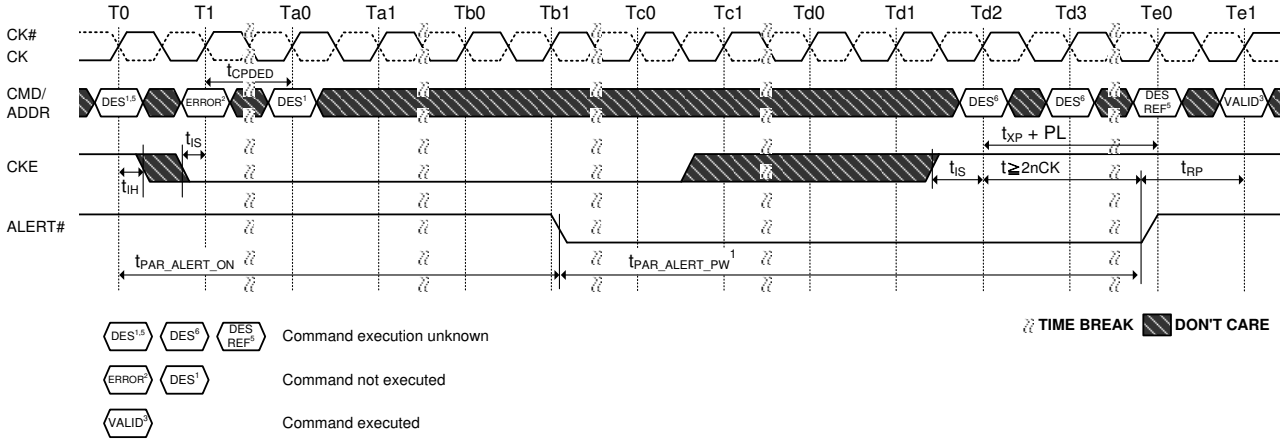

NOTE 1. Deselect command only allowed.
NOTE 2. SelfRefresh command error. DRAM masks the intended SRE command enters Precharge Power Down.
NOTE 3. Normal operation with parity latency(CA Parity Persistent Error Mode disable). Parity checking is off until Parity Error Status bit cleared.
NOTE 4. Controller can not disable clock until it has been able to have detected a possible C/A Parity error.
NOTE 5. Command execution is unknown the corresponding DRAM internal state change may or may not occur.
The DRAM Controller should consider both cases and make sure that the command sequence meets the specifications.
NOTE 6. Deselect command only allowed CKE may go high prior to Tc2 as long as DES commands are issued.

Figure 64. CA Parity Error Checking - SRE Attempt

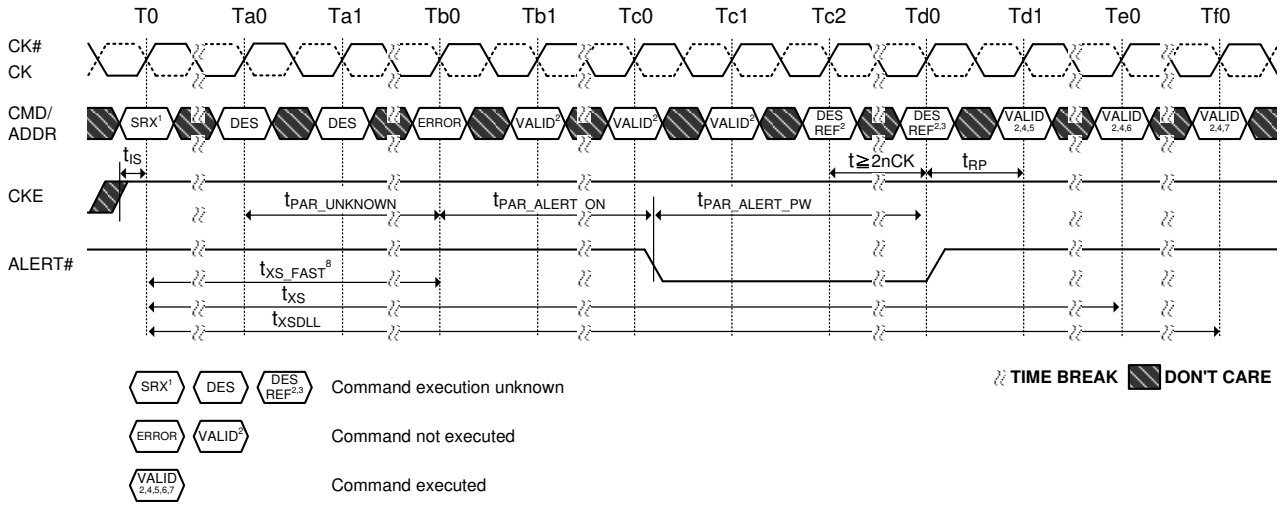

NOTE 1 SelfRefresh Abort = Disable: MR4 [A9=0]
NOTE 2 Input commands are bounded by t_{XSDLL}, t_{XS}, t_{XS_ABORT} and t_{XS_FAST} timing.
NOTE 3 Command execution is unknown the corresponding DRAM internal state change may or may not occur.
The DRAM Controller should consider both cases and make sure that the command sequence meets the specifications.
NOTE 4 Normal operation with parity latency (CA Parity Persistent Error Mode disabled). Parity checking off until Parity Error Status bit cleared.
NOTE 5 Only MRS (limited to those described in the Self-Refresh Operation section), ZQCS or ZQCL command allowed.
NOTE 6 Valid commands not requiring a locked DLL
NOTE 7 Valid commands requiring a locked DLL
NOTE 8 This figure shows the case from which the error occurred after $t_{XS\ FAST}$. An error also occur after t_{XS_ABORT} and t_{XS}.

Figure 65. CA Parity Error Checking - SRX

Command/Address parity entry and exit timings

When in CA Parity mode, including entering and exiting CA Parity mode, users must wait t_{MRD_PAR} before issuing another MRS command, and wait t_{MOD_PAR} before any other commands.

$t_{MOD_PAR} = t_{MOD} + PL$
$t_{MRD_PAR} = t_{MOD} + PL$
For CA parity entry, PL in the equations above is the parity latency programmed with the MRS command entering CA parity mode.
For CA parity exit, PL in the equations above is the programmed parity latency prior to the MRS command exiting CA parity mode.

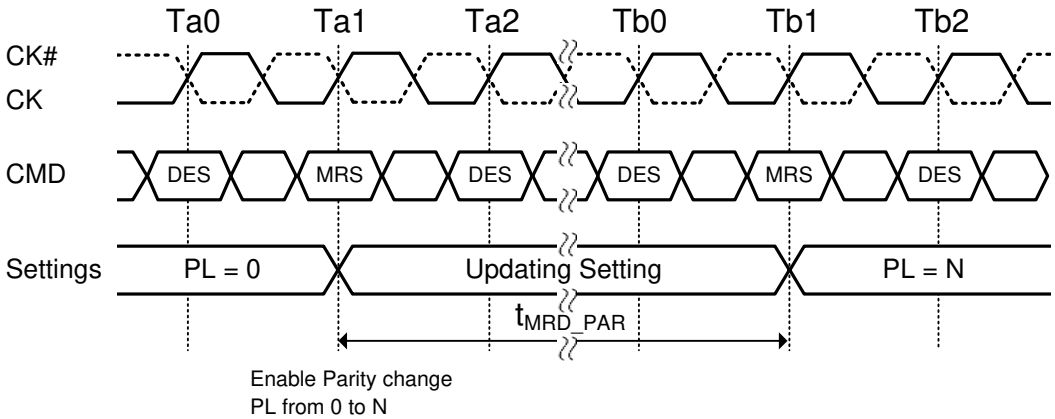

NOTE 1. $t_{MRD_PAR} = t_{MOD} + N$; where N is the programmed parity latency with the MRS command entering CA parity mode.
NOTE 2. Parity check is not available at Ta1 of MRS command due to PL=0 being valid.
NOTE 3. In case parity error happens at Tb1 of MRS command, $t_{PAR_ALERT_ON}$ is 'N[nCK] + 6[ns]'.

Figure 66. Parity entry timing example - t_{MRD_PAR}

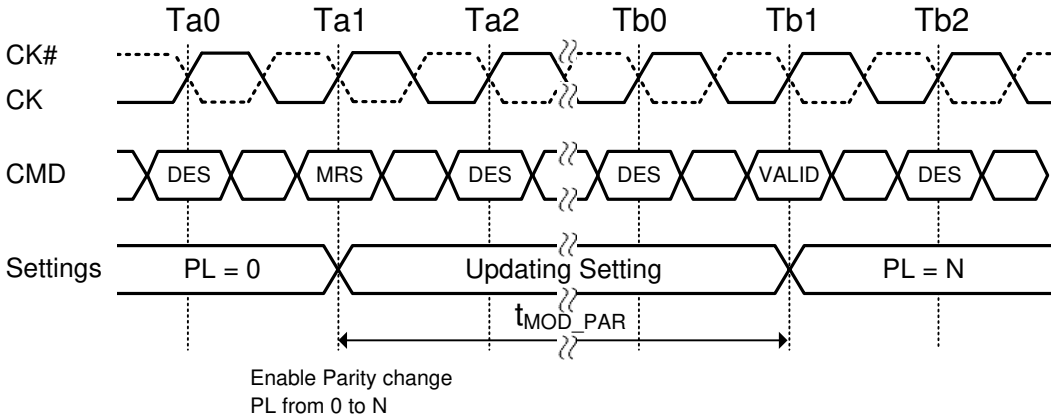

NOTE 1. $t_{MOD_PAR} = t_{MOD} + N$; where N is the programmed parity latency with the MRS command entering CA parity mode.
NOTE 2. Parity check is not available at Ta1 of MRS command due to PL=0 being valid.
NOTE 3. In case parity error happens at Tb1 of VALID command, $t_{PAR_ALERT_ON}$ is 'N[nCK] + 6[ns]'.

Figure 67. Parity entry timing example - t_{MOD_PAR}

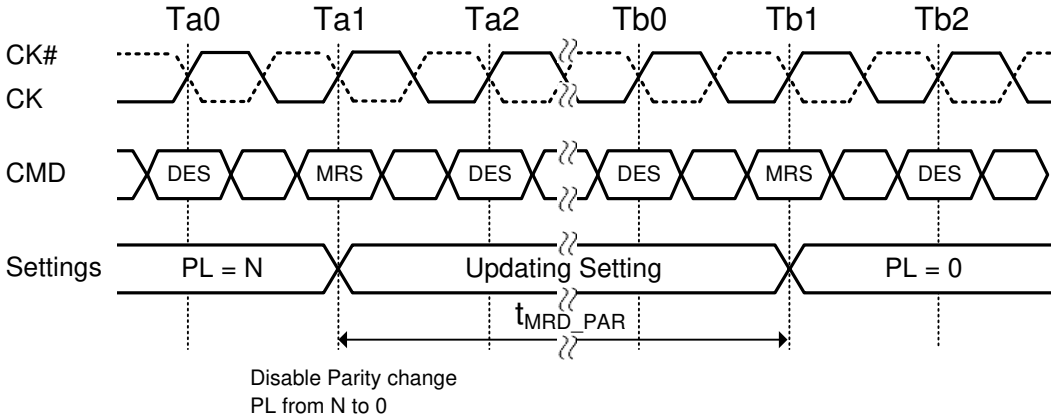

NOTE 1. $t_{MRD_PAR} = t_{MOD} + N$; where N is the programmed parity latency prior to the MRS command exiting CA parity mode.
NOTE 2. In case parity error happens at Ta1 of MRS command, $t_{PAR_ALERT_ON}$ is 'N[nCK] + 6[ns]'.
NOTE 3. Parity check is not available at Tb1 of MRS command due to disabling parity mode.

Figure 68. Parity exit timing example - t_{MRD_PAR}

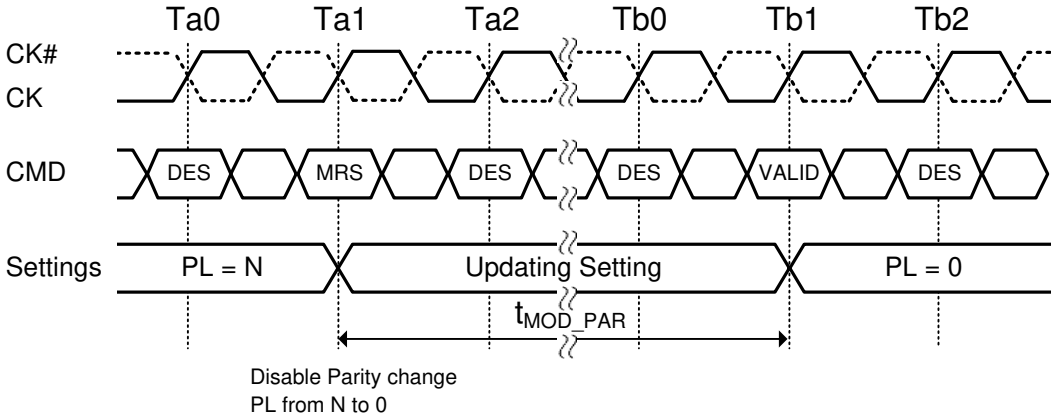

NOTE 1. $t_{MOD_PAR} = t_{MOD} + N$; where N is the programmed parity latency prior to the MRS command exiting CA parity mode.
NOTE 2. In case parity error happens at Ta1 of MRS command, $t_{PAR_ALERT_ON}$ is 'N[nCK] + 6[ns]'.
NOTE 3. Parity check is not available at Tb1 of VALID command due to disabling parity mode.

Figure 69. Parity exit timing example - t_{MOD_PAR}

Multipurpose Register

The Multipurpose Register (MPR) function, MPR access mode, is used to write/read specialized data to/from the DRAM. The MPR consists of four logical pages, MPR Page 0 through MPR Page 3, with each page having four 8-bit registers, MPR0 through MPR3.

MPR mode enable and page selection is done with MRS commands. Data bus inversion (DBI) is not allowed during MPR Read operation. Prior to issuing the MRS command, all banks must be in the idle state (all banks precharged and t_{RP} met). After MPR is enabled, any subsequent RD or RDA commands will be redirected to a specific mode register.

Once the MPR access mode is enabled (MR3 A[2] = 1), only the following commands are allowed: MRS, RD, RDA WR, WRA, DES, REF, and Reset; RDA/WRA have the same functionality as RD/WR which means the auto precharge part of RDA/WRA is ignored. The mode register location is specified with the Read command using address bits. The MR is split into upper and lower halves to align with a burst length limitation of 8. Power-down mode and Self Refresh command are not allowed during MPR enable mode.

No other command can be issued within t_{RFC} after a REF command has been issued; 1x refresh (only) is to be used during MPR access mode. While in MPR access mode, MPR read or write sequences must be completed prior to a Refresh command.

MR3 Setting for the MPR Access Mode

Mode register MR3 controls the Multi-Purpose Registers (MPR) used for training. MR3 is written by asserting CS#, RAS#/A16, CAS#/A15 and WE#/A14 low, ACT#, BA0 and BA1 high and BG1 and BG0 low while controlling the states of the address pins, Refer to the MR3 definition table for more detail.

Table 30. DRAM Address to MPR UI Translation

MPR Location	[7]	[6]	[5]	[4]	[3]	[2]	[1]	[0]
DRAM address – A*x*	A7	A6	A5	A4	A3	A2	A1	A0
MPR UI – UI*x*	UI0	UI1	UI2	UI3	UI4	UI5	UI6	UI7

Table 31. MPR Data Format

Address	MPR Location	[7]	[6]	[5]	[4]	[3]	[2]	[1]	[0]	Note
MPR page0 (Training Pattern)										
BA1:BA0	00 = MPR0	0	1	0	1	0	1	0	1	Read/ Write (default value)
	01 = MPR1	0	0	1	1	0	0	1	1	
	10 = MPR2	0	0	0	0	1	1	1	1	
	11 = MPR3	0	0	0	0	0	0	0	0	
MPR page1 (CA Parity Error Log)										
BA1:BA0	00 = MPR0	A[7]	A[6]	A[5]	A[4]	A[3]	A[2]	A[1]	A[0]	Read-only
	01 = MPR1	CAS#/A15	WE#/A14	A[13]	A[12]	A[11]	A[10]	A[9]	A[8]	
	10 = MPR2	PAR	ACT#	BG[1]	BG[0]	BA[1]	BA[0]	don't care	RAS#/A16	
	11 = MPR3	CRC Error Status	CA Parity Error Status	CA Parity Latency*1			don't care	don't care	don't care	
				MR5.A[2]	MR5.A[1]	MR5.A[0]				
MPR page2 (MRS Readout)										
BA1:BA0	00 = MPR0	hPPR	sPPR	R_{TT_WR}	Temperature sensor*2		CRC Write Enable	R_{TT_WR}		Read-only
		-	-	MR2	-	-	MR2	MR2		
		-	-	A11	-	-	A12	A10	A9	
	01 = MPR1	V_{REFDQ} Training range	V_{REFDQ} Training Value						Geardown Enable	
		MR6	MR6						MR3	
		A6	A5	A4	A3	A2	A1	A0	A3	
	10 = MPR2	CAS Latency				RFU	CAS Write Latency			
		MR0				-	MR2			
		A6	A5	A4	A2	-	A5	A4	A3	
	11 = MPR3	R_{TT_NOM}			R_{TT_PARK}			Driver Impedance		
		MR1			MR5			MR1		
		A10	A9	A6	A8	A7	A6	A2	A1	
MPR page3 (RFU)*3										
BA1:BA0	00 = MPR0	don't care	don't care	don't care	don't care	don't care	don't care	don't care	don't care	Read-only
	01 = MPR1	don't care	don't care	don't care	don't care	don't care	don't care	don't care	don't care	
	10 = MPR2	don't care	don't care	don't care	don't care	don't care	don't care	don't care	don't care	
	11 = MPR3	don't care	don't care	don't care	don't care	MAC	MAC	MAC	MAC	

Note 1. MPR3 bit 0~2 (CA parity latency) reflects the latest programmed CA parity latency values.

Note 2. MR bit for Temperature Sensor Readout

- MR3 bit A5=1: DRAM updates the temperature sensor status to MPR Page 2 (MPR0 bits A4:A3). Temperature data is guaranteed by the DRAM to be no more than 32ms old at the time of MPR Read of the Temperature Sensor Status bits.
- MR3 bit A5=0: DRAM disables updates to the temperature sensor status in MPR Page 2(MPR0 bit A4:A3)

MPR0 bit A4	MPR0 bit A3	Refresh Rate Range
0	0	Sub 1X refresh (> t_{REFI})
0	1	1X refresh rate(= t_{REFI})
1	0	2X refresh rate(1/2 * t_{REFI})
1	1	Reserved

Note 3. Restricted, except for MPR3 [3:0]

MPR Reads

MPR reads are supported using BL8 and BC4 modes. Burst length on-the-fly is not supported for MPR reads. Data bus inversion (DBI) is not allowed during MPR Read operation; the device will ignore the Read DBI enable setting in MR5 [A12] when in MPR mode. Read commands for BC4 are supported with a starting column address of A[2:0] = 000 or 100. After power-up, the content of MPR Page 0 has the default values, which are defined in MPR Data Format table. MPR page 0 can be rewritten via an MPR Write command. The device maintains the default values unless it is rewritten by the DRAM controller. If the DRAM controller does overwrite the default values (Page 0 only), the device will maintain the new values unless re-initialized or there is power loss.

Timing in MPR mode:

- Reads (back-to-back) from Page 0 may use t_{CCD_S} or t_{CCD_L} timing between Read commands.
- Reads (back-to-back) from Pages 1, 2, or 3 may not use t_{CCD_S} timing between Read commands; t_{CCD_L} must be used for timing between Read commands The following steps are required to use the MPR to read out the contents of a mode register (MPR Page *x*, MPR*y*).

1. The DLL must be locked if enabled.
2. Precharge all; wait until t_{RP} is satisfied.
3. MRS command to MR3 A[2] = 1 (Enable MPR data flow), MR3 A[12:11] = MPR read format, and MR3 A[1:0] MPR page.

   a. MR3 A[12:11] MPR read format:
      1) 00 = Serial read format
      2) 01 = Parallel read format
      3) 10 = Staggered read format
      4) 11 = RFU

   b. MR3[1:0] MPR page:
      1) 00 = MPR Page 0
      2) 01 = MPR Page 1
      3) 10 = MPR Page 2
      4) 11 = MPR Page 3

4. t_{MRD} and t_{MOD} must be satisfied.
5. Redirect all subsequent Read commands to specific MPR*x* location.
6. Issue RD or RDA command.

   a. BA1 and BA0 indicate MPR*x* location:
      1) 00 = MPR0
      2) 01 = MPR1
      3) 10 = MPR2
      4) 11 = MPR3

   b. A12/BC# = 0 or 1; BL8 or BC4 fixed-only, BC4 OTF not supported.
      1) If BL = 8 and MR0 A[1:0] = 01, A12/BC# must be set to 1 during MPR Read commands.

   c. A2 = burst-type dependant:
      1) BL8: A2 = 0 with burst order fixed at 0, 1, 2, 3, 4, 5, 6, 7
      2) BL8: A2 = 1 not allowed
      3) BC4: A2 = 0 with burst order fixed at 0, 1, 2, 3, T, T, T, T
      4) BC4: A2 = 1 with burst order fixed at 4, 5, 6, 7, T, T, T, T

   d. A[1:0] = 00, data burst is fixed nibble start at 00.
   e. Remaining address inputs, including A10, BG1 and BG0 are "Don't Care."

7. After RL = AL + CL, DRAM bursts data from MPR*x* location; MPR readout format determined by MR3 A[12:10] and MR3 A[1:0] .
8. Steps 5 through 7 may be repeated to read additional MPR*x* locations.
9. After the last MPR*x* Read burst, t_{MPRR} must be satisfied prior to exiting.
10. Issue MRS command to exit MPR mode; MR3 A[2] = 0.
11. After the t_{MOD} sequence is completed, the DRAM is ready for normal operation from the core (such as ACT).

MPR Readout Serial Format

The serial format is required when enabling the MPR function to read out the contents of an MR*x*, temperature sensor status, and the command address parity error frame. However, data bus calibration locations (four 8-bit registers) can be programmed to read out any of the three formats. The DRAM is required to drive associated strobes with the read data similar to normal operation (such as using MRS preamble settings).
Serial format implies that the same pattern is returned on all DQ lanes, as shown the table below, which uses values programmed into the MPR via [7:0] as 0111 1111.

Table 32. MPR Readout Serial Format

x4 Device								
Serial	**UI0**	**UI1**	**UI2**	**UI3**	**UI4**	**UI5**	**UI6**	**UI7**
DQ0	0	1	1	1	1	1	1	1
DQ1	0	1	1	1	1	1	1	1
DQ2	0	1	1	1	1	1	1	1
DQ3	0	1	1	1	1	1	1	1
x8 Device								
Serial	**UI0**	**UI1**	**UI2**	**UI3**	**UI4**	**UI5**	**UI6**	**UI7**
DQ0	0	1	1	1	1	1	1	1
DQ1	0	1	1	1	1	1	1	1
DQ2	0	1	1	1	1	1	1	1
DQ3	0	1	1	1	1	1	1	1
DQ4	0	1	1	1	1	1	1	1
DQ5	0	1	1	1	1	1	1	1
DQ6	0	1	1	1	1	1	1	1
DQ7	0	1	1	1	1	1	1	1
x16 Device								
Serial	**UI0**	**UI1**	**UI2**	**UI3**	**UI4**	**UI5**	**UI6**	**UI7**
DQ0	0	1	1	1	1	1	1	1
DQ1	0	1	1	1	1	1	1	1
DQ2	0	1	1	1	1	1	1	1
DQ3	0	1	1	1	1	1	1	1
DQ4	0	1	1	1	1	1	1	1
DQ5	0	1	1	1	1	1	1	1
DQ6	0	1	1	1	1	1	1	1
DQ7	0	1	1	1	1	1	1	1
DQ8	0	1	1	1	1	1	1	1
DQ9	0	1	1	1	1	1	1	1
DQ10	0	1	1	1	1	1	1	1
DQ11	0	1	1	1	1	1	1	1
DQ12	0	1	1	1	1	1	1	1
DQ13	0	1	1	1	1	1	1	1
DQ14	0	1	1	1	1	1	1	1
DQ15	0	1	1	1	1	1	1	1

MPR Readout Parallel Format

Parallel format implies that the MPR data is returned in the first data UI and then repeated in the remaining UIs of the burst, as shown in the table below. Data pattern location 0 is the only location used for the parallel format. RD/RDA from data pattern locations 1, 2, and 3 are not allowed with parallel data return mode. In this example, the pattern programmed in the data pattern location 0 is 0111 1111. The x4 configuration only outputs the first four bits (0111 in this example).The x16 configuration, the same pattern is repeated on both the upper and lower bytes.

Table 33. MPR Readout Serial Format

x4 Device								
Serial	**UI0**	**UI1**	**UI2**	**UI3**	**UI4**	**UI5**	**UI6**	**UI7**
DQ0	0	0	0	0	0	0	0	0
DQ1	1	1	1	1	1	1	1	1
DQ2	1	1	1	1	1	1	1	1
DQ3	1	1	1	1	1	1	1	1
x8 Device								
Serial	**UI0**	**UI1**	**UI2**	**UI3**	**UI4**	**UI5**	**UI6**	**UI7**
DQ0	0	0	0	0	0	0	0	0
DQ1	1	1	1	1	1	1	1	1
DQ2	1	1	1	1	1	1	1	1
DQ3	1	1	1	1	1	1	1	1
DQ4	1	1	1	1	1	1	1	1
DQ5	1	1	1	1	1	1	1	1
DQ6	1	1	1	1	1	1	1	1
DQ7	1	1	1	1	1	1	1	1
x16 Device								
Serial	**UI0**	**UI1**	**UI2**	**UI3**	**UI4**	**UI5**	**UI6**	**UI7**
DQ0	0	0	0	0	0	0	0	0
DQ1	1	1	1	1	1	1	1	1
DQ2	1	1	1	1	1	1	1	1
DQ3	1	1	1	1	1	1	1	1
DQ4	1	1	1	1	1	1	1	1
DQ5	1	1	1	1	1	1	1	1
DQ6	1	1	1	1	1	1	1	1
DQ7	1	1	1	1	1	1	1	1
DQ8	0	0	0	0	0	0	0	0
DQ9	1	1	1	1	1	1	1	1
DQ10	1	1	1	1	1	1	1	1
DQ11	1	1	1	1	1	1	1	1
DQ12	1	1	1	1	1	1	1	1
DQ13	1	1	1	1	1	1	1	1
DQ14	1	1	1	1	1	1	1	1
DQ15	1	1	1	1	1	1	1	1

MPR Readout Staggered Format

Staggered format of data return is defined as the staggering of the MPR data across the lanes. In this mode, an RD/RDA command is issued to a specific data pattern location and then the data is returned on the DQ from each of the different data pattern locations. For the x4 configuration, an RD/RDA to data pattern location 0 will result in data from location 0 being driven on DQ0, data from location 1 being driven on DQ1, data from location 2 being driven on DQ2, and so on, as shown below. Similarly, an RD/RDA command to data pattern location 1 will result in data from location 1 being driven on DQ0, data from location 2 being driven on DQ1, data from location 3 being driven on DQ2, and so on. Examples of different starting locations are also shown.

Table 34. MPR Readout Staggered Format, x4

x4 Read MPR0 Command		x4 Read MPR1 Command		x4 Read MPR2 Command		x4 Read MPR3 Command	
Stagger	UI[7:0]	Stagger	UI[7:0]	Stagger	UI[7:0]	Stagger	UI[7:0]
DQ0	MPR0	DQ0	MPR1	DQ0	MPR2	DQ0	MPR3
DQ1	MPR1	DQ1	MPR2	DQ1	MPR3	DQ1	MPR0
DQ2	MPR2	DQ2	MPR3	DQ2	MPR0	DQ2	MPR1
DQ3	MPR3	DQ3	MPR0	DQ3	MPR1	DQ3	MPR2

It is expected that the DRAM can respond to back-to-back RD/RDA commands to the MPR for all DDR4 frequencies so that a sequence (such as the one that follows) can be created on the data bus with no bubbles or clocks between read data. In this case, the system memory controller issues a sequence of RD(MPR0), RD(MPR1), RD(MPR2), RD(MPR3), RD(MPR0), RD(MPR1), RD(MPR2), and RD(MPR3).

Table 35. MPR Readout Staggered Format, x4 – Consecutive Reads

Stagger	UI[7:0]	UI[15:8]	UI[23:16]	UI[31:24]	UI[39:32]	UI[47:40]	UI[55:48]	UI[63:56]
DQ0	MPR0	MPR1	MPR2	MPR3	MPR0	MPR1	MPR2	MPR3
DQ1	MPR1	MPR2	MPR3	MPR0	MPR1	MPR2	MPR3	MPR0
DQ2	MPR2	MPR3	MPR0	MPR1	MPR2	MPR3	MPR0	MPR1
DQ3	MPR3	MPR0	MPR1	MPR2	MPR3	MPR0	MPR1	MPR2

For the x8 configuration, the same pattern is repeated on the lower nibble as on the upper nibble. READs to other MPR data pattern locations follow the same format as the x4 case. A read example to MPR0 for x8 and x16 configurations is shown below.

Table 36. MPR Readout Staggered Format, x8 and x16

x8 Read MPR0 Command		x16 Read MPR0 Command			
Stagger	UI[7:0]	Stagger	UI[7:0]	Stagger	UI[7:0]
DQ0	MPR0	DQ0	MPR0	DQ8	MPR0
DQ1	MPR1	DQ1	MPR1	DQ9	MPR1
DQ2	MPR2	DQ2	MPR2	DQ10	MPR2
DQ3	MPR3	DQ3	MPR3	DQ11	MPR3
DQ4	MPR0	DQ4	MPR0	DQ12	MPR0
DQ5	MPR1	DQ5	MPR1	DQ13	MPR1
DQ6	MPR2	DQ6	MPR2	DQ14	MPR2
DQ7	MPR3	DQ7	MPR3	DQ15	MPR3

MPR Read Waveforms

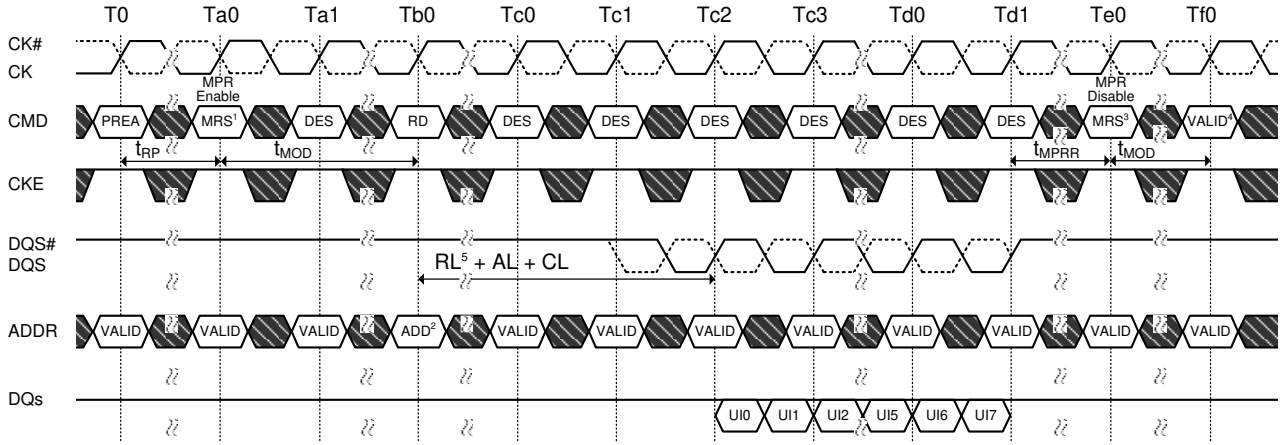

TIME BREAK DON'T CARE

NOTE 1. Multi-Purpose Registers Read/Write Enable (MR3 A2 = 1)
- Redirect all subsequent read and writes to MPR locations

NOTE 2. Address setting
- A[1:0] = “00”b (data burst order is fixed starting at nibble, always 00b here)
- A[2] = “0”b (For BL=8, burst order is fixed at 0,1,2,3,4,5,6,7)
- BA1 and BA0 indicate the MPR location
- A10 and other address pins are don't care including BG1 and BG0. A12 is don't care when MR0 A[1:0] = “00” or “10” , and must be ‘1’b when MR0 A[1:0] = “01”

NOTE 3. Multi-Purpose Registers Read/Write Disable (MR3 A2 = 0)

NOTE 4. Continue with regular DRAM command.

NOTE 5. PL(Parity latency) is added to Data output delay when C/A parity latency mode is enabled.

Figure 70. MPR Read Timing

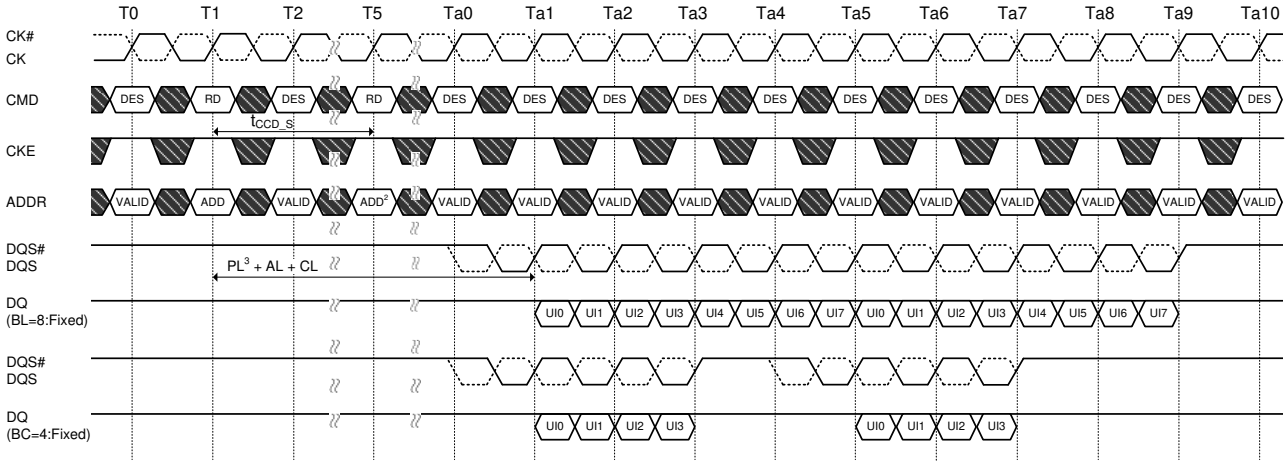

TIME BREAK DON'T CARE

NOTE 1. t_{CCD_S} = 4, Read Preamble = $1t_{CK}$

NOTE 2. Address setting
- A[1:0] = “00”b (data burst order is fixed starting at nibble, always 00b here)
- A[2]= “0”b (For BL=8, burst order is fixed at 0,1,2,3,4,5,6,7)
  (For BC=4, burst order is fixed at 0,1,2,3,T,T,T,T)
- BA1 and BA0 indicate the MPR location
- A10 and other address pins are don't care including BG1 and BG0. A12 is don't care when MR0 A[1:0] = “00” or “10”, and must be ‘1’b when MR0 A[1:0] = “01”

NOTE 3. PL(Parity latency) is added to Data output delay when C/A parity latency mode is enabled.

Figure 71. MPR Back to Back Read Timing

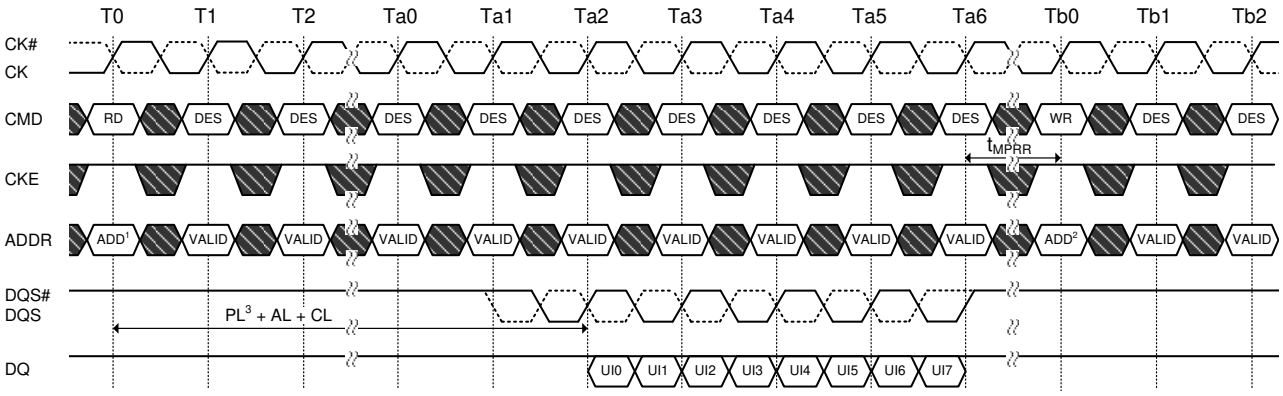

NOTE 1. Address setting
- A[1:0] = “00”b (data burst order is fixed starting at nibble, always 00b here)
- A[2]= “0”b (For BL=8, burst order is fixed at 0,1,2,3,4,5,6,7)
- BA1 and BA0 indicate the MPR location
- A10 and other address pins are don’t care including BG1 and BG0. A12 is don’t care when MR0 A[1:0] = “00”, and must be ‘1’b when MR0 A[1:0] = “01”

NOTE 2. Address setting
- BA1 and BA0 indicate the MPR location
- A [7:0] = data for MPR
- A10 and other address pins are don’t care.

NOTE 3. PL(Parity latency) is added to Data output delay when C/A parity latency mode is enabled.

Figure 72. MPR Read to Write Timing

MPR Writes

MPR access mode allows 8-bit writes to the MPR Page 0 using the address bus A[7:0]. Data bus inversion (DBI) is not allowed during MPR Write operation. The DRAM will maintain the new written values unless re-initialized or there is power loss.

The following steps are required to use the MPR to write to mode register MPR Page 0.

1. The DLL must be locked if enabled.
2. Precharge all; wait until t_{RP} is satisfied.
3. MRS command to MR3 A[2] = 1 (enable MPR data flow) and MR3 A[1:0] = 00 (MPR Page 0); writes to 01, 10, and 11 are not allowed.
4. t_{MRD} and t_{MOD} must be satisfied.
5. Redirect all subsequent Write commands to specific MPR*x* location.
6. Issue WR or WRA command:
   a. BA1 and BA0 indicate MPR*x* location
      1) 00 = MPR0
      2) 01 = MPR1
      3) 10 = MPR2
      4) 11 = MPR3
   b. A[7:0] = data for MPR Page 0, mapped A[7:0] to UI[7:0].
   c. Remaining address inputs, including A10, BG1 and BG0 are "Don't Care"
7. t_{WR_MPR} must be satisfied to complete MPR Write.
8. Steps 5 through 7 may be repeated to write additional MPR*x* locations.
9. After the last MPR*x* write, t_{MPRR} must be satisfied prior to exiting.
10. Issue MRS command to exit MPR mode; MR3 A[2] = 0.
11. When the t_{MOD} sequence is completed, the DRAM is ready for normal operation from the core (such as ACT).

MPR Write Waveforms

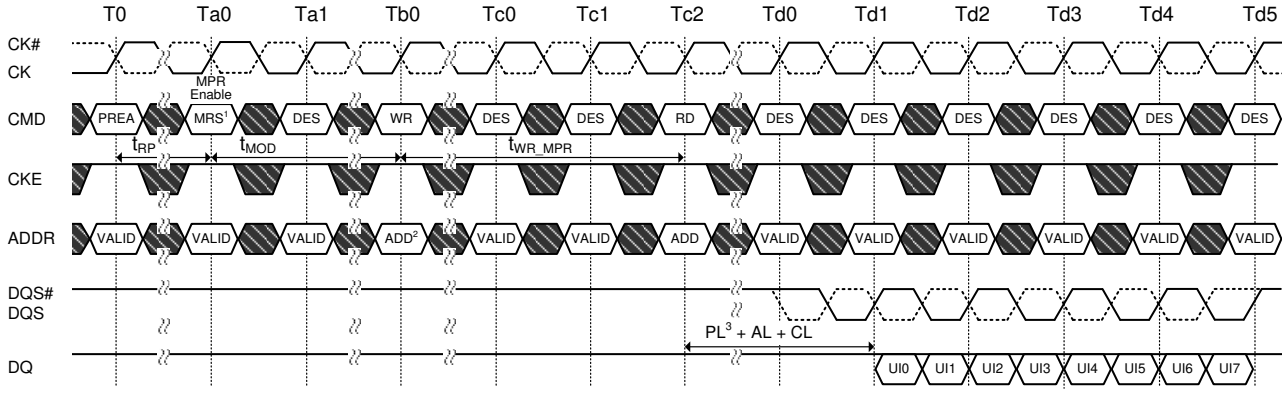

NOTE 1. Multi-Purpose Registers Read/Write Enable (MR3 A2 = 1)
NOTE 2. Address setting - BA1 and BA0 indicate the MPR location
- A [7:0] = data for MPR
- A10 and other address pins are don't care.
NOTE 3. PL(Parity latency) is added to Data output delay when C/A parity latency mode is enabled.

Figure 73. MPR Write Timing and Write to Read Timing

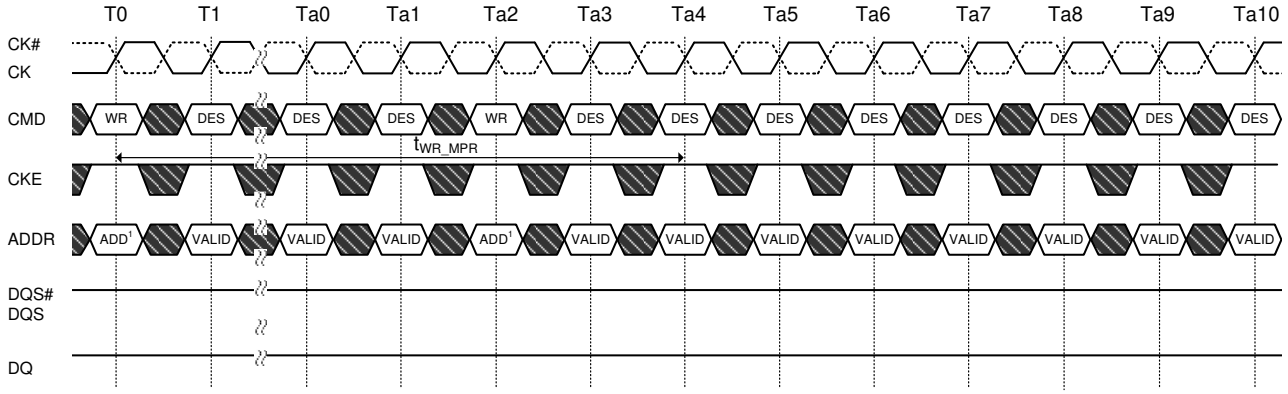

NOTE 1. Address setting
- BA1 and BA0 indicate the MPR location
- A [7:0] = data for MPR
- A10 and other address pins are don't care.

Figure 74. MPR Back to Back Write Timing

MPR Refresh Waveforms

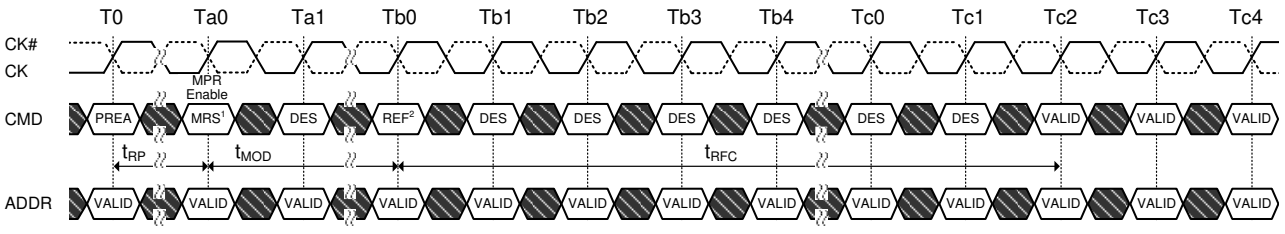

NOTE 1. Multi-Purpose Registers Read/Write Enable (MR3 A2 = 1)
- Redirect all subsequent read and writes to MPR locations

NOTE 2. 1x Refresh is only allowed when MPR mode is Enable.

Figure 75. Refresh Command Timing

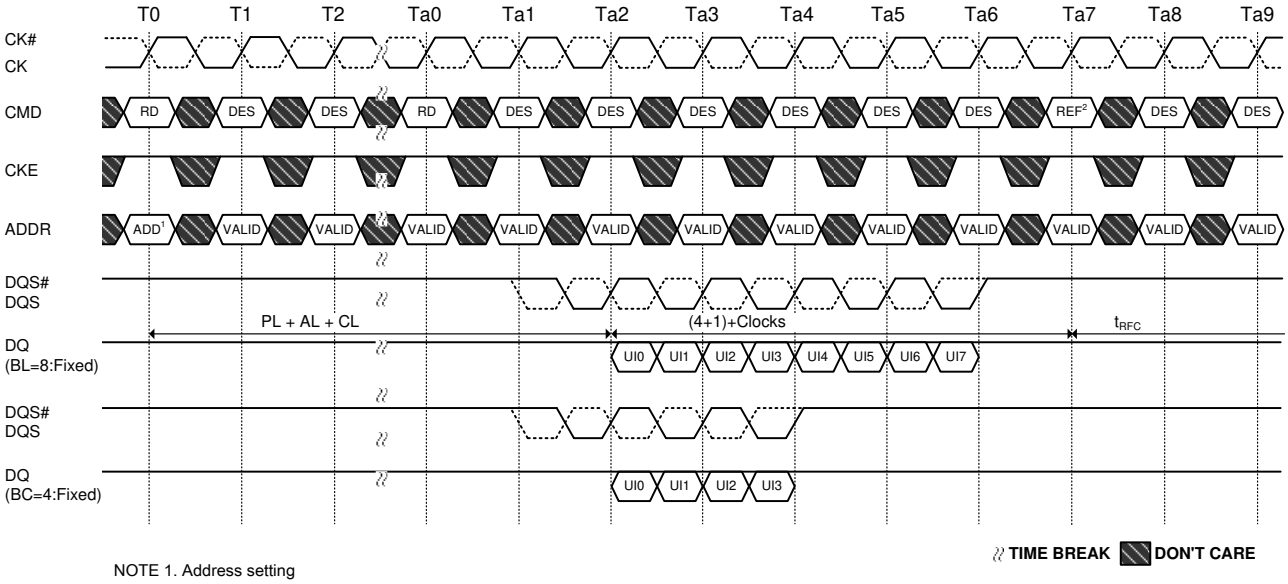

NOTE 1. Address setting
- A[1:0] = "00"b (data burst order is fixed starting at nibble, always 00b here)
- A[2]= "0"b (For BL=8, burst order is fixed at 0,1,2,3,4,5,6,7)
- BA1 and BA0 indicate the MPR location
- A10 and other address pins are don't care including BG1 and BG0. A12 is don't care when MR0 A[1:0] = "00" or "10"
, and must be '1'b when MR0 A[1:0] = "01"

NOTE 2. 1x Refresh is only allowed when MPR mode is Enable.

Figure 76. Read to Refresh Command Timing

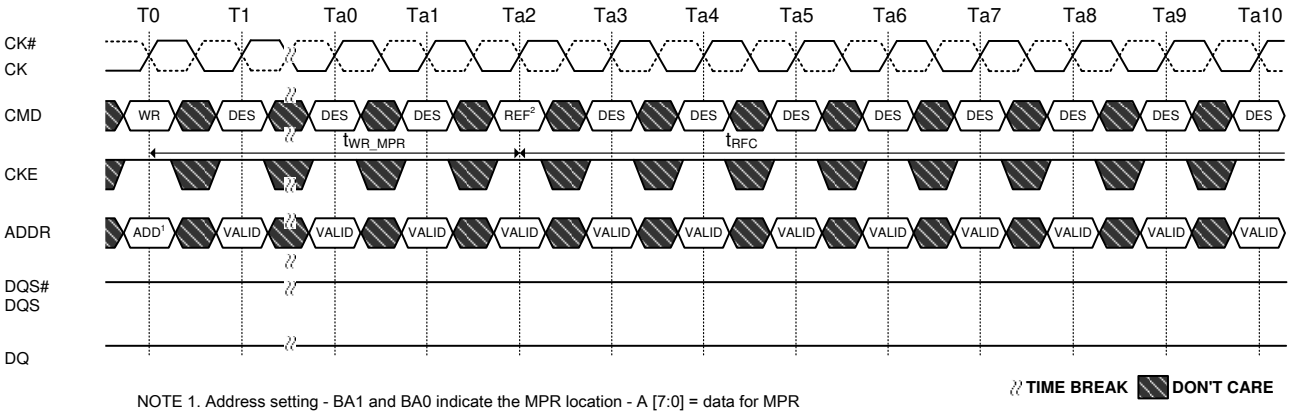

NOTE 1. Address setting - BA1 and BA0 indicate the MPR location - A [7:0] = data for MPR
- A10 and other address pins are don't care.

NOTE 2. 1x Refresh is only allowed when MPR mode is Enable.

Figure 77. Write to Refresh Command Timing

DDR4 Key Core Timing

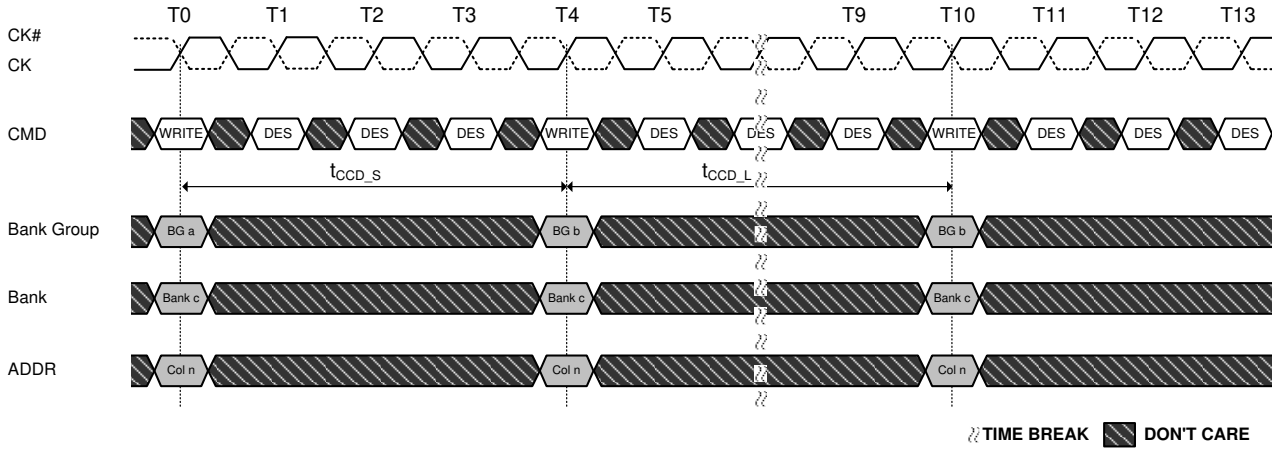

NOTE 1. tCCD_S : CAS#-to-CAS# delay (short) : Applies to consecutive CAS# to different Bank Group (i.e., T0 to T4).
NOTE 2. tCCD_L : CAS#-to-CAS# delay (long) : Applies to consecutive CAS# to the same Bank Group (i.e., T4 to T10).

Figure 78. t_{CCD} Timing (Write to Write Example)

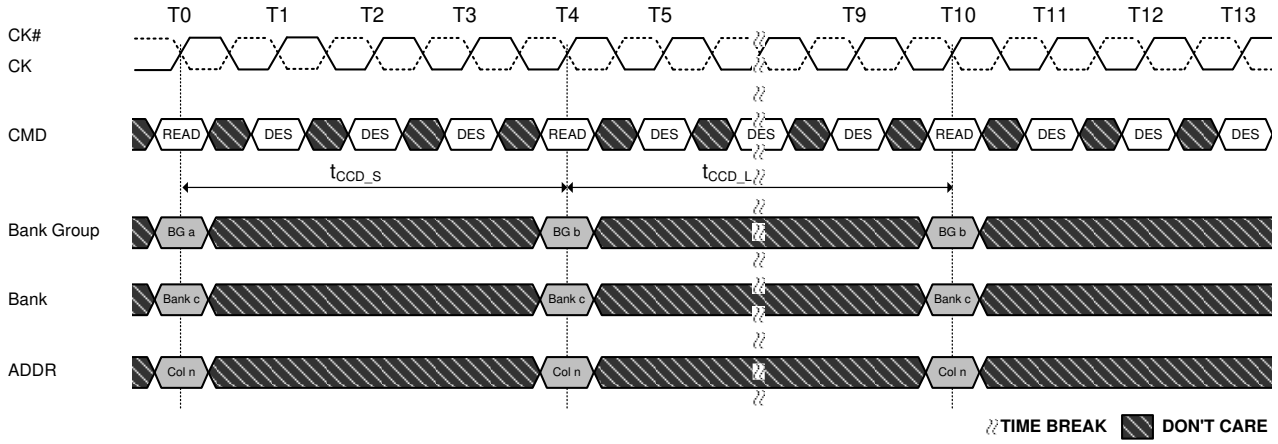

NOTE 1. tCCD_S : CAS#-to-CAS# delay (short) : Applies to consecutive CAS# to different Bank Group (i.e., T0 to T4)
NOTE 2. tCCD_L : CAS#-to-CAS# delay (long) : Applies to consecutive CAS# to the same Bank Group (i.e., T4 to T10)

Figure 79. t_{CCD} Timing (Read to Read Example)

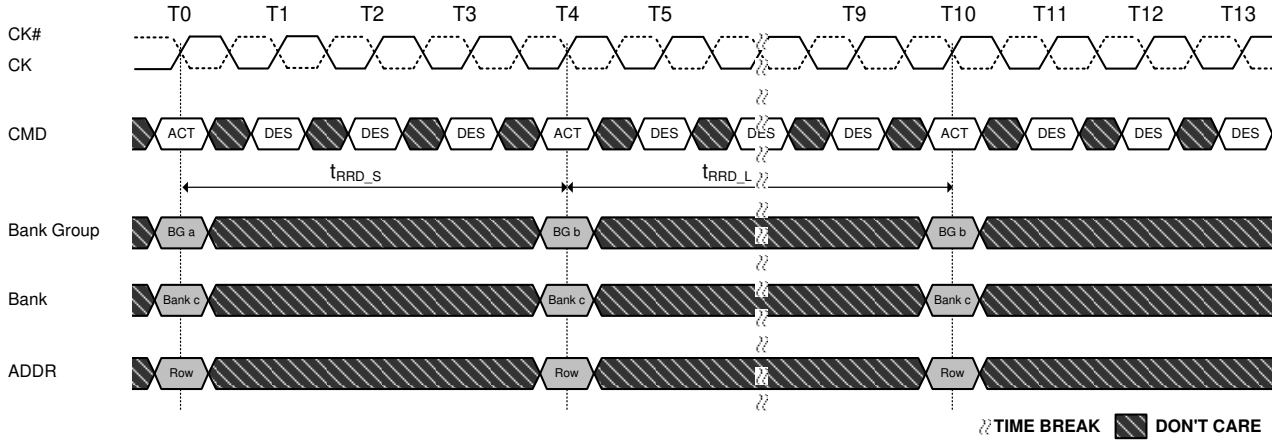

NOTE 1. tRRD_S: ACTIVATE to ACTIVATE Command period (short) : Applies to consecutive ACTIVATE Commands to different Bank Group (i.e., T0 to T4).
NOTE 2. tRRD_L: ACTIVATE to ACTIVATE Command period (long) : Applies to consecutive ACTIVATE Commands to the different Banks of the same Bank Group (i.e., T4 to T10).

Figure 80. t_{RRD} Timing

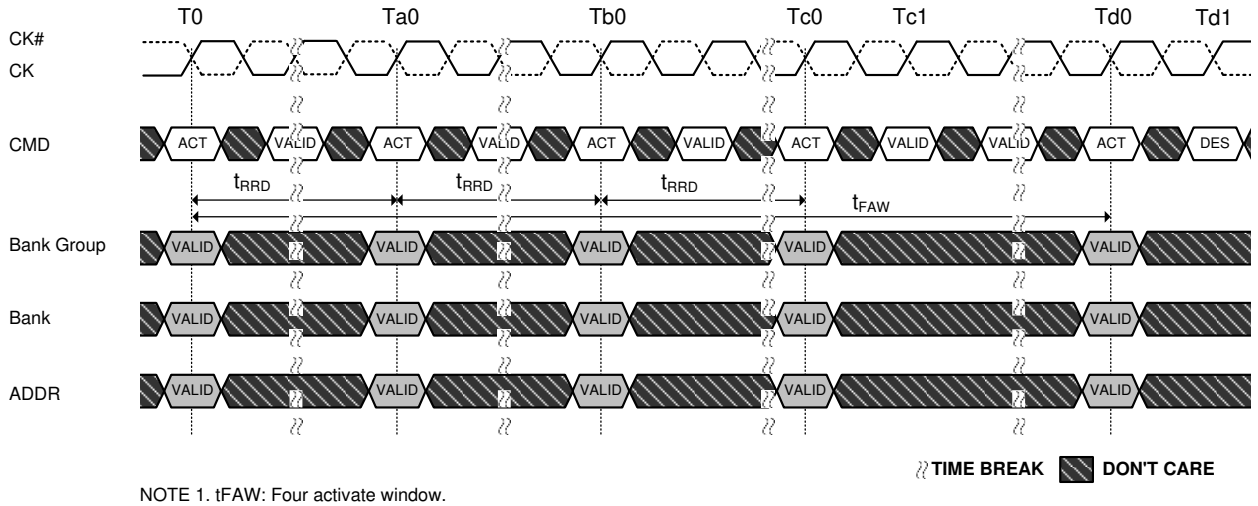

NOTE 1. tFAW: Four activate window.

Figure 81. t_{FAW} Timing

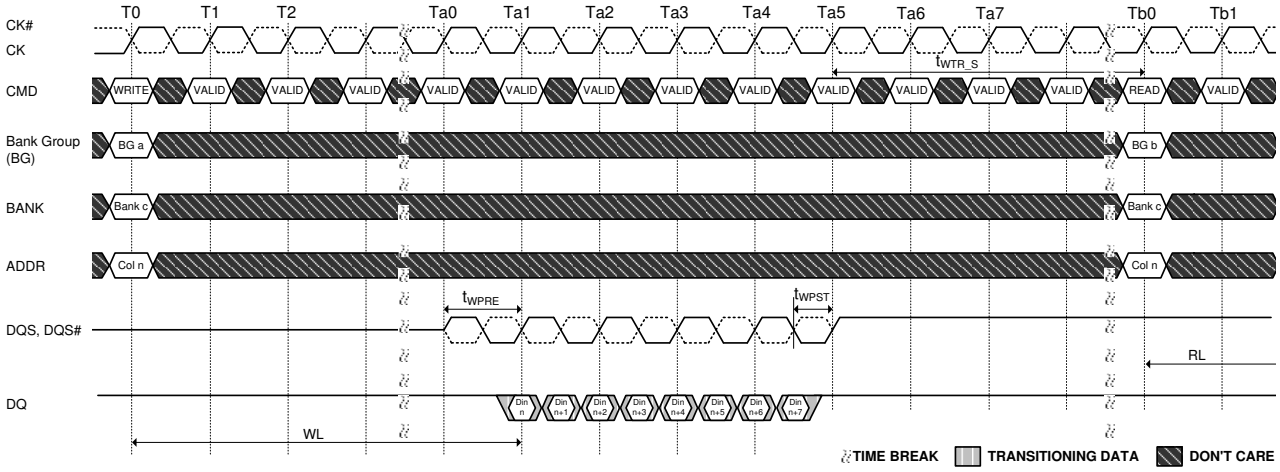

NOTE 1. tWTR_S : Delay from start of internal write transaction to internal read command to a different Bank Group.
When AL is non-zero, the external read command at Tb0 can be pulled in by AL.

Figure 82. t_{WTR_S} Timing (Write to Read, Different Bank Group, CRC and DM Disabled)

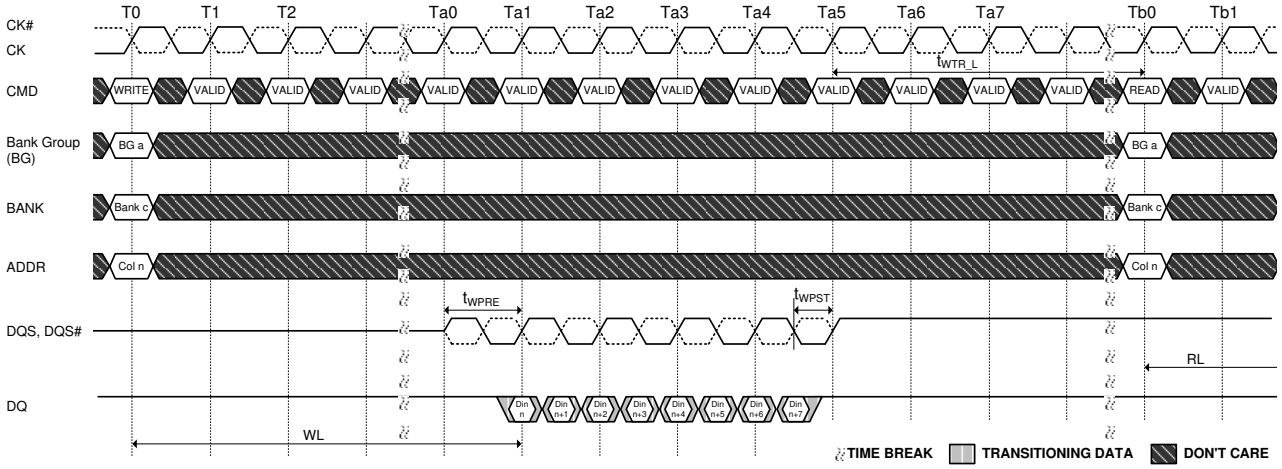

NOTE 1. tWTR_L: Delay from start of internal write transaction to internal read command to the same Bank Group.
When AL is nonzero, the external read command at Tb0 can be pulled in by AL.

Figure 83. t_{WTR_L} Timing (Write to Read, Same Bank Group, CRC and DM Disabled)

Programmable Preamble

The DQS preamble can be programmed to one or the other of 1 t_{CK} and 2 t_{CK} preamble; selectable via MRS (MR4 A[12:11]). The 1 t_{CK} preamble applies to all speed-Grade and The 2 t_{CK} preamble is valid for DDR4-2400/2666/3200 speed-Grade.

Write Preamble

DDR4 supports a programmable write preamble. The 1 t_{CK} or 2 t_{CK} Write Preamble is selected via MR4 A[12]. Write preamble modes of 1 t_{CK} and 2 t_{CK} are shown below.

When operating in 2 t_{CK} Write preamble mode in MR2 CWL (CAS Write Latency), CWL of 1st Set needs to be incremented by 2 nCK and CWL of 2nd Set does not need increment of it. t_{WTR} must be increased by one clock cycle from the t_{WTR} required in the applicable speed bin table. WR must be programmed to a value one or two clock cycle(s), depending on available settings, greater than the WR setting required per the applicable speed bin table.

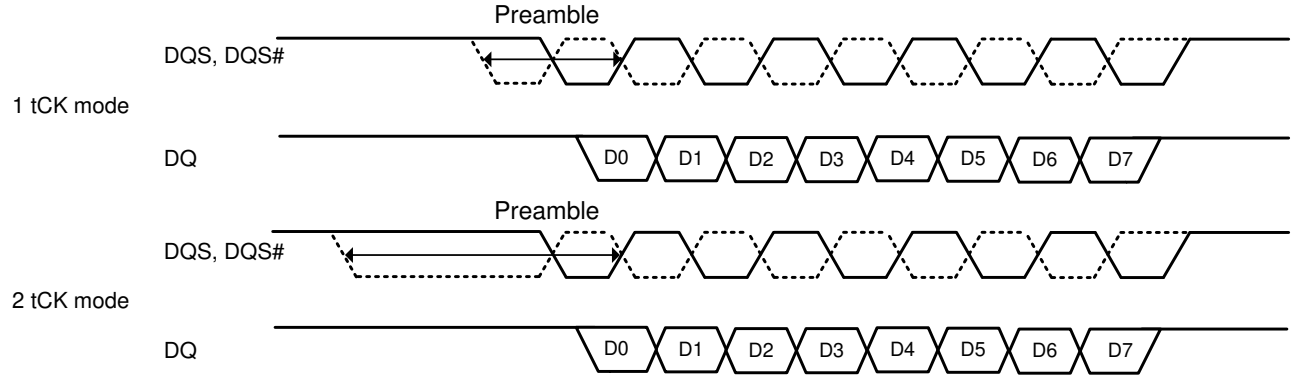

Figure 84. 1t_{CK} vs. 2t_{CK} Write Preamble Mode

The timing diagrams contained in t_{CCD}=4 (AL=PL=0), t_{CCD}=5 and t_{CCD}=6 (AL=PL=0) illustrate 1 and 2 t_{CK} preamble scenarios for consecutive write commands with t_{CCD} timing of 4, 5 and 6 nCK, respectively. Setting t_{CCD} to 5nCK is not allowed in 2 t_{CK} preamble mode.

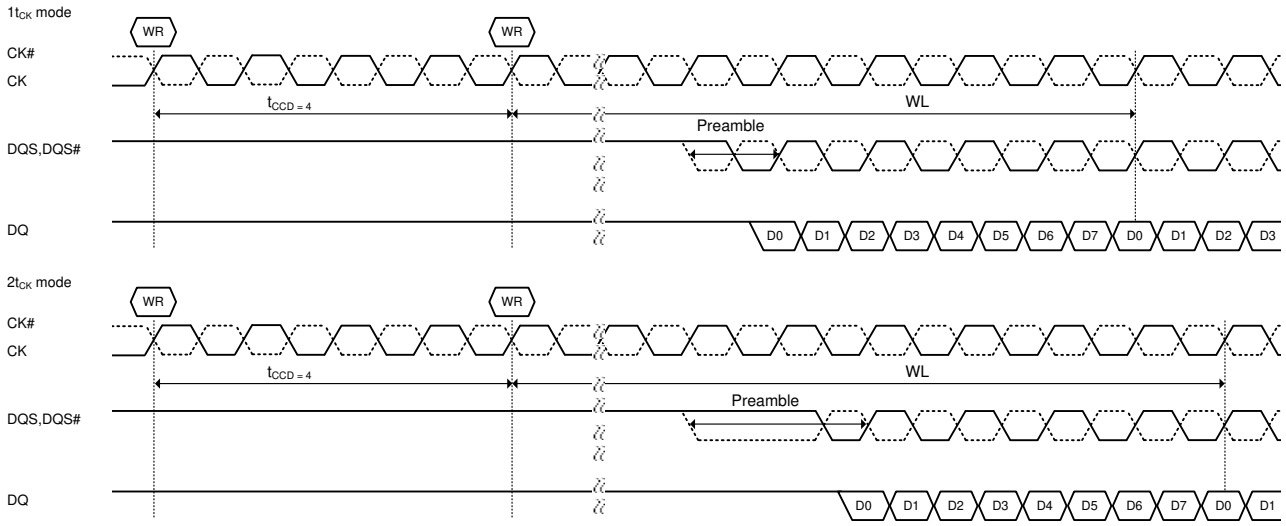

Figure 85. t_{CCD}=4 (AL=PL=0)

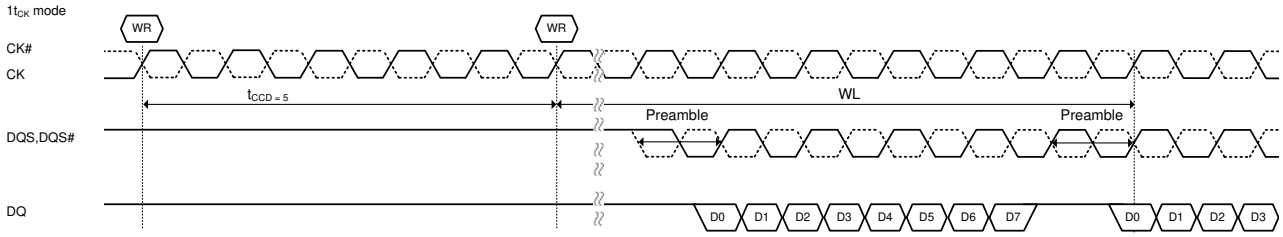

2_{tCK} mode: t_{CCD}=5 is not allowed in 2_{tCK} mode

Figure 86. t_{CCD}=5 (AL=PL=0)

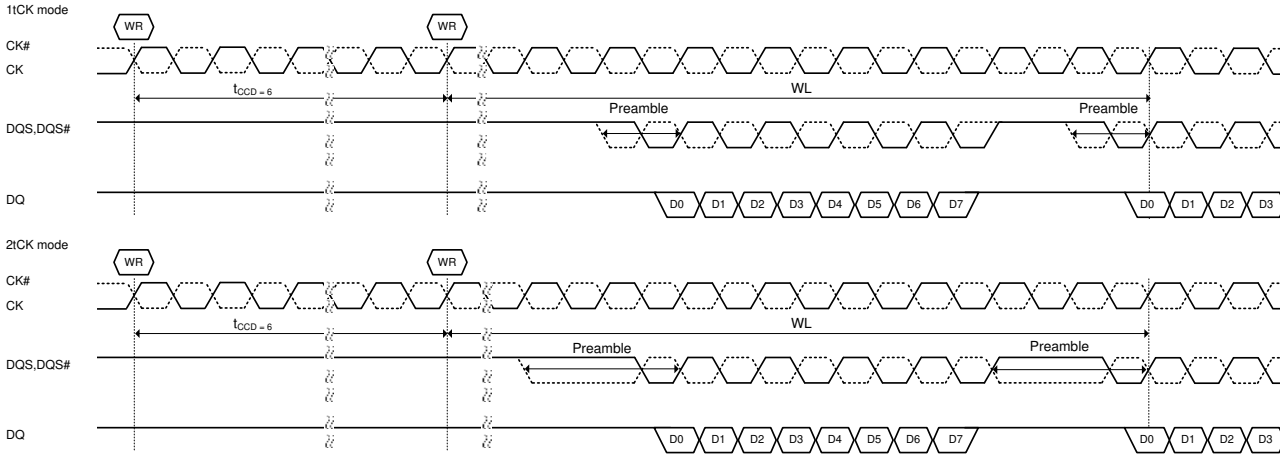

Figure 87. t_{CCD}=6 (AL=PL=0)

Read Preamble

DDR4 supports a programmable read preamble. The 1 t_{CK} and 2 t_{CK} Read preamble is selected via MR4 A[11]. Read preamble modes of 1 t_{CK} and 2 t_{CK} are shown as follows:

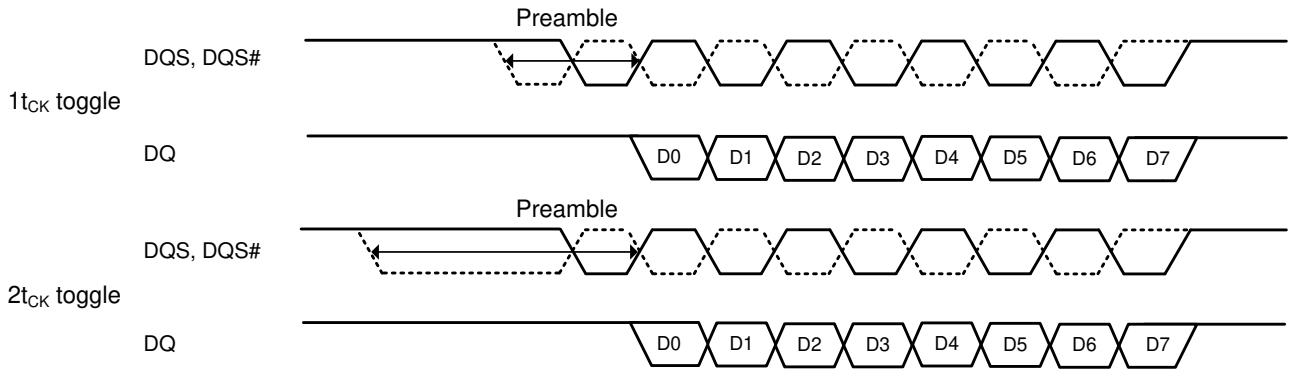

Figure 88. 1t_{CK} vs. 2t_{CK} Read Preamble Mode

Read Preamble Training

DDR4 supports Read preamble training via MPR reads; that is, Read preamble training is allowed only when the DRAM is in the MPR access mode. The Read preamble training mode can be used by the DRAM controller to train or "read level" its DQS receivers. Read preamble training is entered via an MRS command (MR4 A[10] = 1 is enabled and MR4 A[10] = 0 is disabled). After the MRS command is issued to enable Read preamble training, the DRAM DQS signals are driven to a valid level by the time t_{SDO} is satisfied. During this time, the data bus DQ signals are held quiet, i.e. driven high. The DQS signal remains driven low and the DQS# signal remains driven high until an MPR Page0 Read command is issued (MPR0 through MPR3 determine which pattern is used), and when CAS latency (CL) has expired, the DQS signals will toggle normally depending on the burst length setting. To exit Read preamble training mode, an MRS command must be issued, MR4 A[10] = 0.

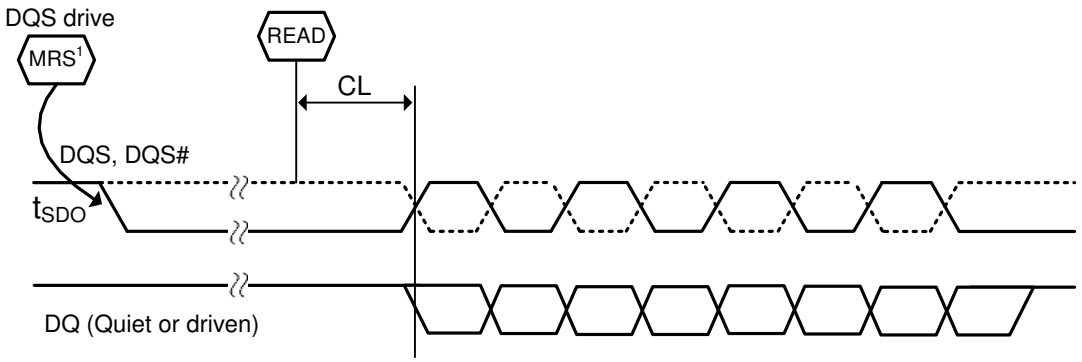

NOTE 1. Read Preamble Training mode is enabled by MR4 A10 = [1]

Figure 89. Read Preamble Training

Table 37. AC Timing Table

Symbol	Parameter	Min.	Max.	Unit
t_{SDO}	Delay from MRS Command to Data Strobe Drive Out	-	t_{MOD} + 9ns	

Postamble

Read Postamble

Whether the 1 t_{CK} or 2 t_{CK} Read Preamble Mode is selected, the Read Postamble remains the same at 1/2 t_{CK}.
DDR4 will support a fixed read postamble.
Read postamble of nominal 0.5 t_{CK} for preamble modes 1,2 t_{CK} are shown below:

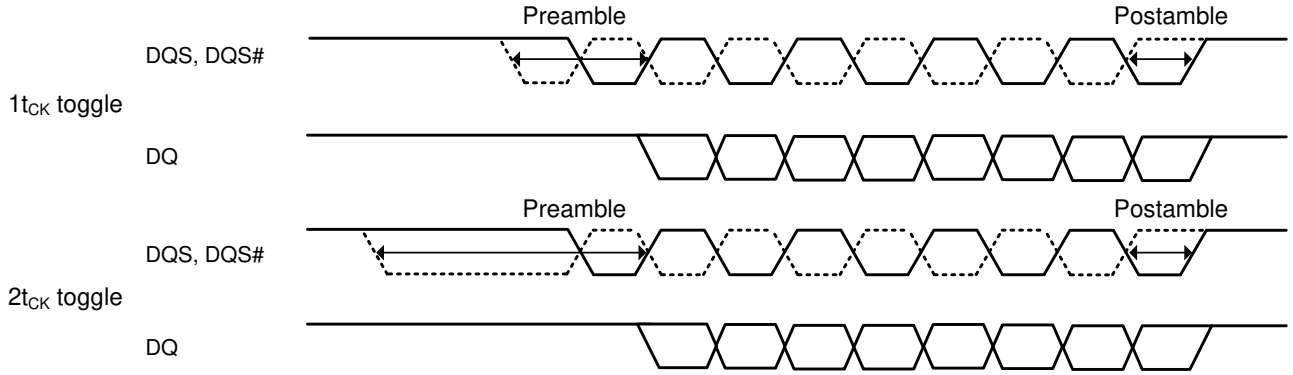

Figure 90. Read Postamble

Write Postamble

Whether the 1 t_{CK} or 2 t_{CK} Write preamble mode is selected, the Write postamble remains the same at 1/2 t_{CK}.
DDR4 will support a fixed Write postamble.
Write postamble nominal is 0.5 t_{CK} for preamble modes 1,2 t_{CK} are shown below:

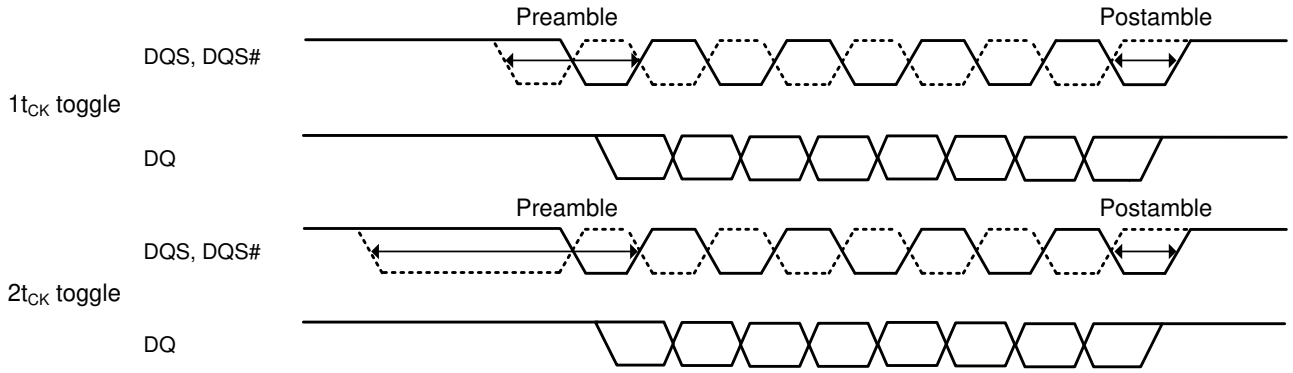

Figure 91. Write Postamble

Activate Command

The Activate command is used to open (or activate) a row in a particular bank for a subsequent access. The value on the BG0-BG1 in x8 select the bank group; BA0-BA1 inputs selects the bank within the bank group, and the address provided on inputs A0-A14 selects the row. This row remains active (or open) for accesses until a precharge command is issued to that bank or a precharge all command is issued. A bank must be precharged before opening a different row in the same bank.

Precharge Command

The Precharge command is used to deactivate the open row in a particular bank or the open row in all banks. The bank(s) will be available for a subsequent row activation a specified time (t_{RP}) after the Precharge command is issued, except in the case of concurrent auto precharge, where a Read or Write command to a different bank is allowed as long as it does not interrupt the data transfer in the current bank and does not violate any other timing parameters. Once a bank has been precharged, it is in the idle state and must be activated prior to any Read or Write commands being issued to that bank. A Precharge command is allowed if there is no open row in that bank (idle state) or if the previously open row is already in the process of precharging. However, the precharge period will be determined by the last Precharge command issued to the bank.

If A10 is high when Read or Write command is issued, then auto-precharge function is engaged. This feature allows the precharge operation to be partially or completely hidden during burst read cycles (dependent upon CAS latency) thus improving system performance for random data access. The RAS lockout circuit internally delays the precharge operation until the array restore operation has been completed (t_{RAS} satisfied) so that the auto precharge command may be issued with any read. Auto-precharge is also implemented during Write commands. The precharge operation engaged by the Auto precharge command will not begin until the last data of the burst write sequence is properly stored in the memory array. The bank will be avaiable for a subsequent row activation a specified time (t_{RP}) after hidden Precharge command (AutoPrecharge) is issued to that bank.

Read Operation

Read Timing Definitions

Read timings are shown below and are applicable in normal operation mode, i.e. when the DLL is enabled and locked.

Rising data strobe edge parameters:

- t_{DQSCK} min/max describes the allowed range for a rising data strobe edge relative to CK, CK#.
- t_{DQSCK} is the actual position of a rising strobe edge relative to CK, CK#.
- t_{QSH} describes the DQS, DQS# differential output high time.
- t_{DQSQ} describes the latest valid transition of the associated DQ pins.
- t_{QH} describes the earliest invalid transition of the associated DQ pins.

Falling data strobe edge parameters:

- t_{QSL} describes the DQS, DQS# differential output low time.
- t_{DQSQ} describes the latest valid transition of the associated DQ pins.
- t_{QH} describes the earliest invalid transition of the associated DQ pins.

t_{DQSQ}; both rising/falling edges of DQS, no t_{AC} defined.

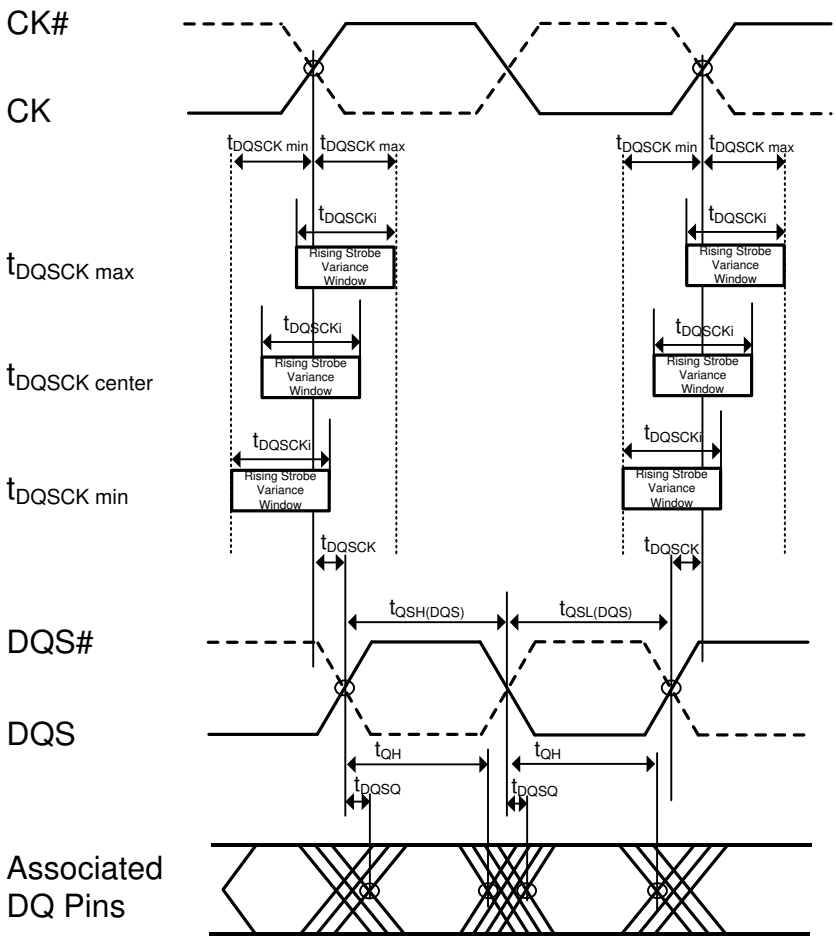

Figure 92. Read Timing Definition

Read Timing; Clock to Data Strobe relationship

The clock to data strobe relationship is shown below and is applicable in normal operation mode, i.e. when the DLL is enabled and locked.

Rising data strobe edge parameters:

- t_{DQSCK} min/max describes the allowed range for a rising data strobe edge relative to CK, CK#.
- t_{DQSCK} is the actual position of a rising strobe edge relative to CK, CK#.
- t_{QSH} describes the data strobe high pulse width.

Falling data strobe edge parameters:

- t_{QSL} describes the data strobe low pulse width.
- $t_{LZ(DQS)}$, $t_{HZ(DQS)}$ for preamble/postamble.

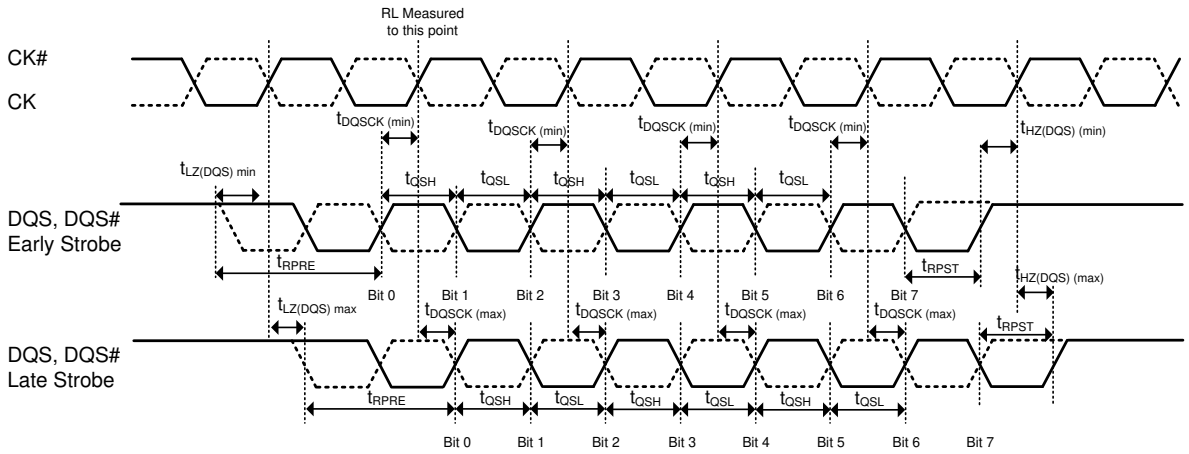

NOTE 1. Within a burst, rising strobe edge can be varied within t_{DQSCKi} while at the same voltage and temperature. However incorporate the device, voltage and temperature variation, rising strobe edge variance window, t_{DQSCKi} can shift between $t_{DQSCK(min)}$ and $t_{DQSCK(max)}$. A timing of this window's right inside edge (latest) from risinG CK, CK# is limited by a device's actual $t_{DQSCK(max)}$. A timing of this window's left inside edge (earliest) from rising CK, CK# is limited by $t_{DQSCK(min)}$.

NOTE 2. Notwithstanding note 1, a rising strobe edge with $t_{DQSCK(max)}$ at T(n) can not be immediately followed by a rising strobe Edge with $t_{DQSCK(min)}$ at T(n+1). This is because other timing relationships (t_{QSH}, t_{QSL}) exist: if $t_{DQSCK(n+1)} < 0$: $t_{DQSCK(n)} < 1.0\ t_{CK} - (t_{QSHmin} + t_{QSLmin}) - |t_{DQSCK(n+1)}|$

NOTE 3. The DQS, DQS# differential output high time is defined by t_{QSH} and the DQS, DQS# differential output low time is defined by t_{QSL}.

NOTE 4. LikeWise, tLZ(DQS)min and tHZ(DQS)min are not tied to tDQSCKmin (early strobe case) and tLZ(DQS)max and tHZ(DQS)max are not tied to $t_{DQSCKmax}$ (late strobe case).

NOTE 5. The minimum pulse width of read preamble is defined by $t_{RPRE(min)}$.

NOTE 6. The maximum read postamble is bound by $t_{DQSCK(min)}$ plus $t_{QSH(min)}$ on the left side and $t_{HZDQS(max)}$ on the right side.

NOTE 7. The minimum pulse width of read postamble is defined by $t_{RPST(min)}$.

NOTE 8. The maximum read preamble is bound by $t_{LZDQS(min)}$ on the left side and $t_{DQSCK(max)}$ on the right side.

Figure 93. Clock to Data Strobe Relationship

Read Timing; Data Strobe to Data relationship

The Data Strobe to Data relationship is shown below and is applied when the DLL is enabled and locked.

Rising data strobe edge parameters:

- t_{DQSQ} describes the latest valid transition of the associated DQ pins.
- t_{QH} describes the earliest invalid transition of the associated DQ pins.

Falling data strobe edge parameters:

- t_{DQSQ} describes the latest valid transition of the associated DQ pins.
- t_{QH} describes the earliest invalid transition of the associated DQ pins.

t_{DQSQ}; both rising/falling edges of DQS, no tAC defined.

Data Valid Window:

- t_{DVWd} is the Data Valid Window per device per UI and is derived from (t_{QH} - t_{DQSQ}) of each UI on a given DRAM. This parameter will be characterized and guaranteed by design.
- t_{DVWp} is Data Valid Window per pin per UI and is derived from (t_{QH} - t_{DQSQ}) of each UI on a pin of a given DRAM. This parameter will be characterized and guaranteed by design.

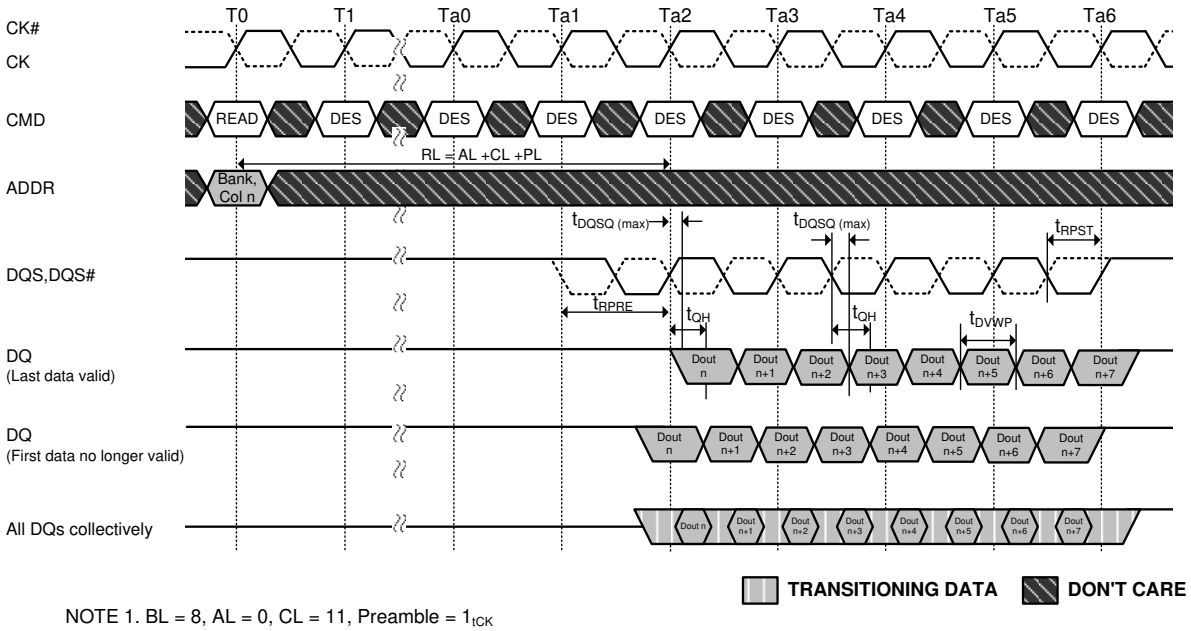

NOTE 1. BL = 8, AL = 0, CL = 11, Preamble = 1_{tCK}
NOTE 2. Dout n = data-out from column n.
NOTE 3. DES commands are shown for ease of illustration; other commands may be valid at these times.
NOTE 4. BL8 setting activated by either MR0[A1:0 = 00] or MR0[A1:0 = 01] and A12 = 1 during READ command at T0.
NOTE 5. Output timings are referenced to VDDQ, and DLL on for locking.
NOTE 6. t_{DQSQ} defines the skew between DQS,DQS# to Data and does not define DQS, DQS# to Clock.
NOTE 7. Early Data transitions may not always happen at the same DQ. Data transitions of a DQ can vary (either early or late) within a burst.

Figure 94. Data Strobe to Data Relationship

$t_{LZ(DQS)}$, $t_{LZ(DQ)}$, $t_{HZ(DQS)}$, $t_{HZ(DQ)}$ Calculation

t_{HZ} and t_{LZ} transitions occur in the same time window as valid data transitions. These parameters are referenced to a specific voltage level that specifies when the device output is no longer driving $t_{HZ(DQS)}$ and $t_{HZ(DQ)}$, or begins driving $t_{LZ(DQS)}$, $t_{LZ(DQ)}$.

t_{LZ} shows a method to calculate the point when the device is no longer driving $t_{HZ(DQS)}$ and $t_{HZ(DQ)}$, or begins driving $t_{LZ(DQS)}$, $t_{LZ(DQ)}$, by measuring the signal at two different voltages. The actual voltage measurement points are not critical as long as the calculation is consistent. The parameters $t_{LZ(DQS)}$, $t_{LZ(DQ)}$, $t_{HZ(DQS)}$, and $t_{HZ(DQ)}$ are defined as single ended.

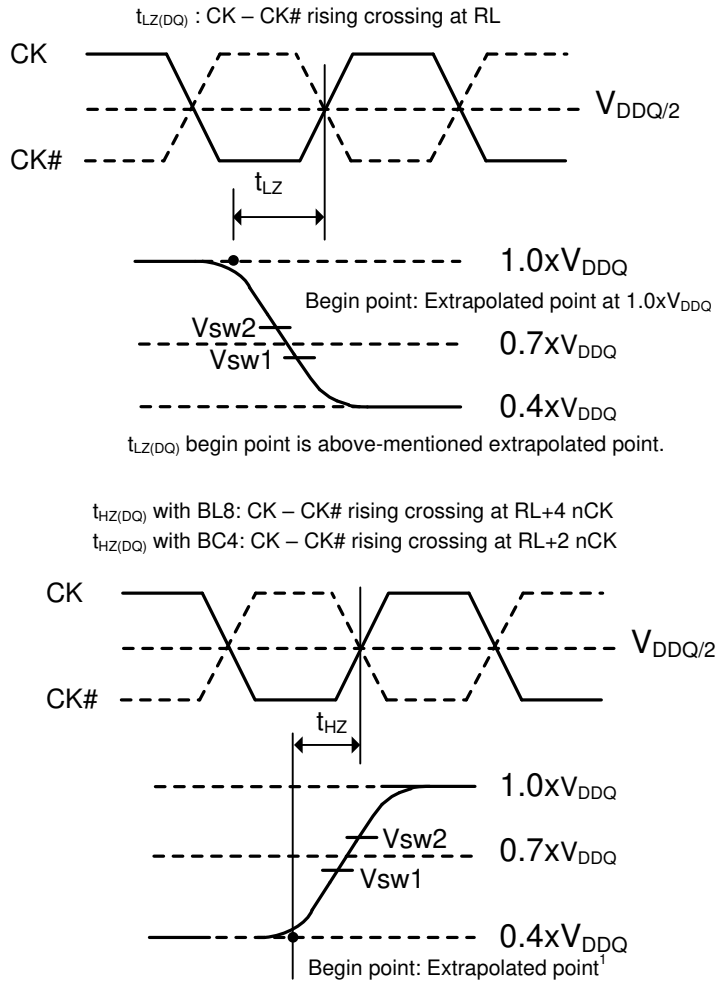

NOTE 1. Extrapolated point (Low Level) = V_{DDQ}/(50+34) x 34
= V_{DDQ} x 0.40
- A driver impedance : RZQ/7(34ohm)
- An effective test load : 50 ohm to V_{TT} = V_{DDQ}

Figure 95. $t_{LZ(DQ)}$ and $t_{HZ(DQ)}$ method for calculating transitions and begin points

Table 38. Reference Voltage for $t_{LZ(DQ)}$, $t_{HZ(DQ)}$ Timing Measurements

Symbol	Parameter	Vsw1	Vsw2	Unit
$t_{LZ(DQ)}$	DQ low-impedance time from CK, CK#	(0.70 - 0.04) x V_{DDQ}	(0.70 + 0.04) x V_{DDQ}	V
$t_{HZ(DQ)}$	DQ high impedance time from CK, CK#	(0.70 - 0.04) x V_{DDQ}	(0.70 + 0.04) x V_{DDQ}	V

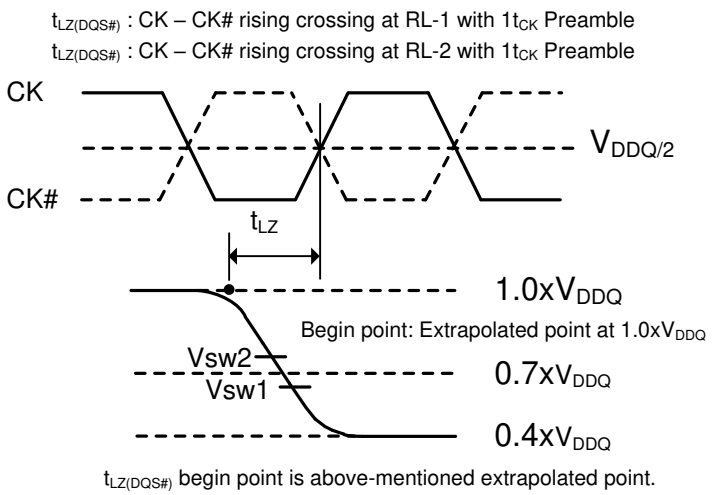

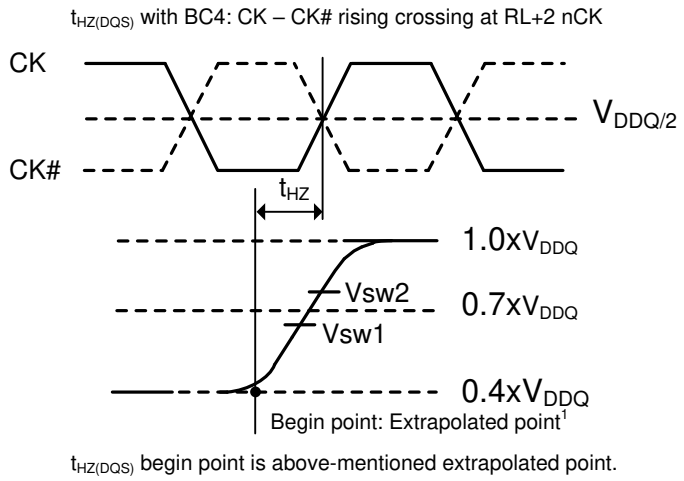

NOTE 1. Extrapolated point (Low Level) = $V_{DDQ}/(50+34) \times 34$
$= V_{DDQ} \times 0.40$
- A driver impedance : RZQ/7(34ohm)
- An effective test load : 50 ohm to $V_{TT} = V_{DDQ}$

Figure 96. $t_{LZ(DQS\#)}$ and $t_{HZ(DQS)}$ method for calculating transitions and begin

Table 39. Reference Voltage for $t_{LZ(DQS\#)}$, $t_{HZ(DQS)}$ Timing Measurements

Symbol	Parameter	Vsw1	Vsw2	Unit
$t_{LZ(DQS\#)}$	DQS# low-impedance time from CK, CK#	(0.70 - 0.04) x V_{DDQ}	(0.70 + 0.04) x V_{DDQ}	V
$t_{HZ(DQS)}$	DQS high impedance time from CK, CK#	(0.70 - 0.04) x V_{DDQ}	(0.70 + 0.04) x V_{DDQ}	V

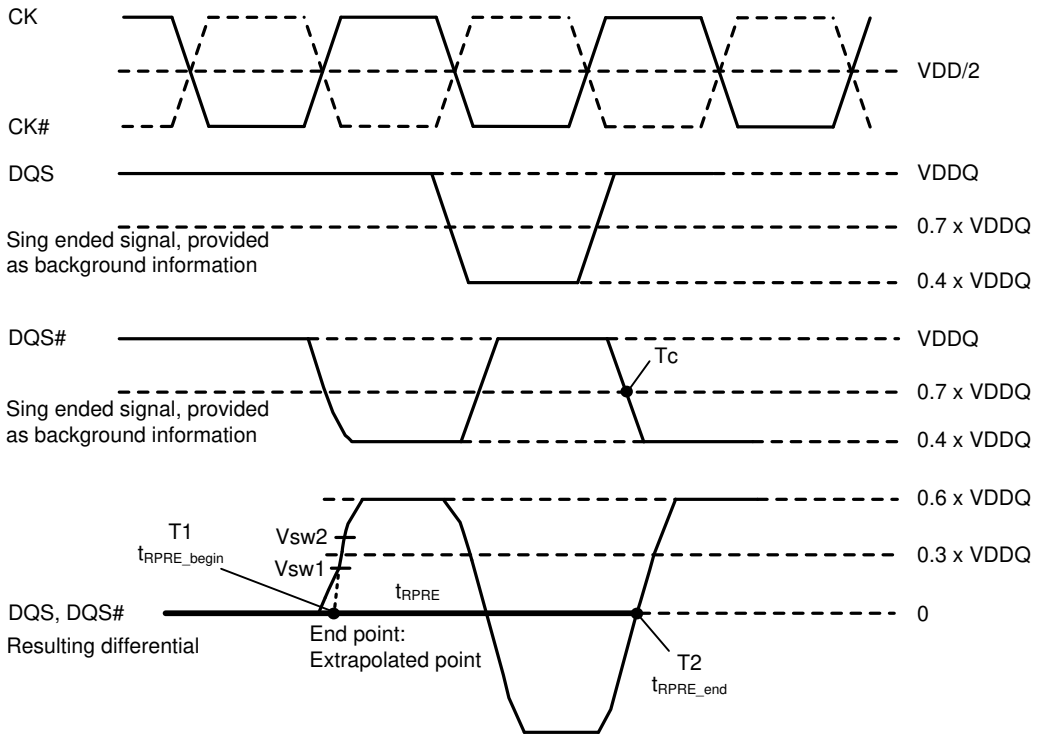

NOTE 1. Low Level of DQS and DQS# = V_{DDQ}/(50+34) x 34
= V_{DDQ} x 0.40
- A driver impedance : RZQ/7(34ohm)
- An effective test load : 50 ohm to V_{TT} = V_{DDQ}

Figure 97. Method for calculating t_{RPRE} transitions and endpoints

Table 40. Reference Voltage for t_{RPRE} Timing Measurements

Symbol	Parameter	Vsw1	Vsw2	Unit
t_{RPRE}	DQS, DQS# differential Read Preamble	(0.30 - 0.04) x V_{DDQ}	(0.30 + 0.04) x V_{DDQ}	V

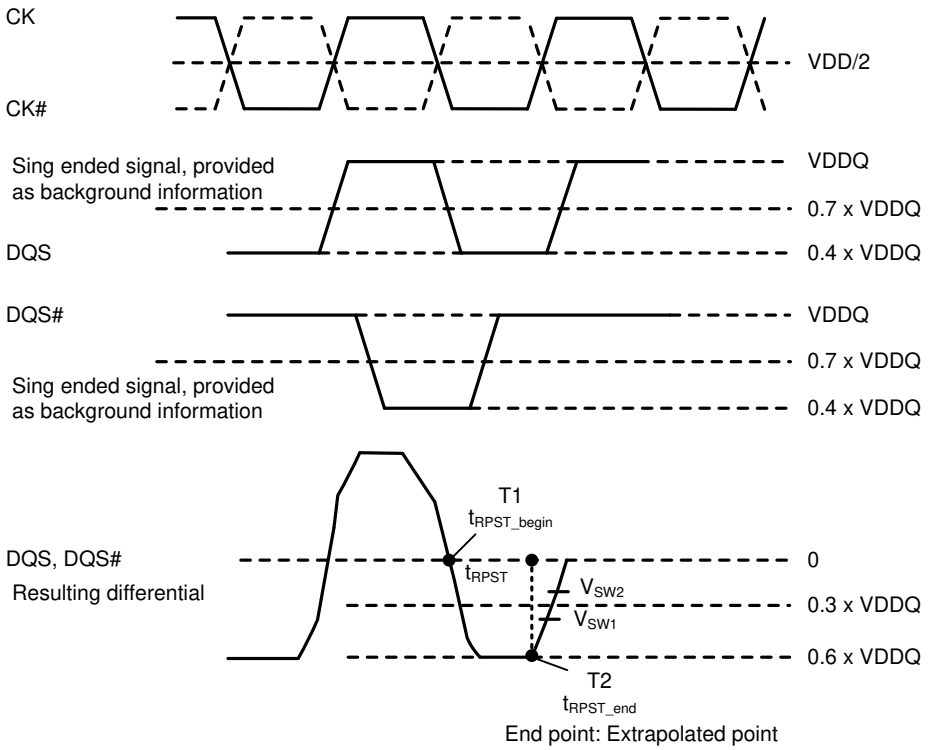

NOTE 1. Low Level of DQS and DQS# = V_{DDQ}/(50+34) x 34
= V_{DDQ} x 0.40
- A driver impedance : RZQ/7(34ohm)
- An effective test load : 50 ohm to V_{TT} = V_{DDQ}

Figure 98. Method for calculating t_{RPST} transitions and endpoints

Table 41. Reference Voltage for t_{RPST} Timing Measurements

Symbol	Parameter	Vsw1	Vsw2	Unit
t_{RPST}	DQS, DQS# differential Read Postamble	(-0.30 - 0.04) x V_{DDQ}	(-0.30 + 0.04) x V_{DDQ}	V

Read Burst Operation

DDR4 Read command supports bursts of BL8 (fixed), BC4 (fixed), and BL8/BC4 on-the-fly (OTF); OTF uses address A12 to control OTF during the Read or Write (auto-precharge can be enabled or disabled).

- A12 = 0, BC4 (BC4 = burst chop)
- A12 = 1, BL8

Read commands can issue precharge automatically with a read with auto-precharge command (RDA); and is enabled by A10 high.

- Read command with A10 = 0 (RD) performs standard Read, bank remains active after read burst.
- Read command with A10 = 1 (RDA) performs Read with auto-precharge, back goes in to precharge after read burst.

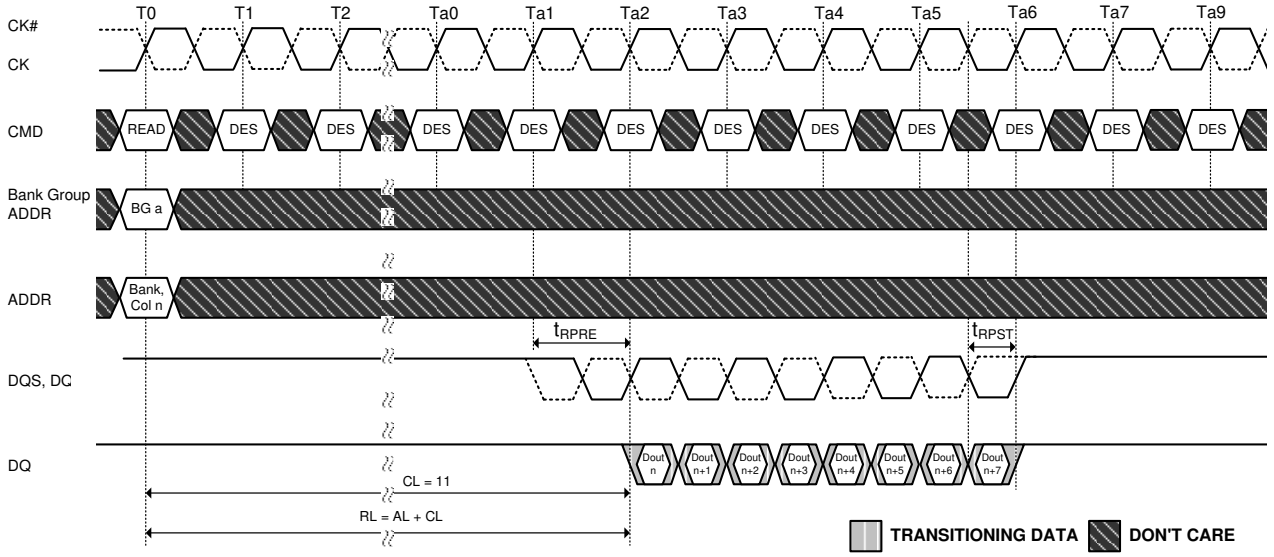

NOTE 1. BL = 8, AL = 0, CL = 11, Preamble = $1t_{CK}$
NOTE 2. Dout n = data-out from column n.
NOTE 3. DES commands are shown for ease of illustration; other commands may be valid at these times.
NOTE 4. BL8 setting activated by either MR0[A1:0 = 00] or MR0[A1:0 = 01] and A12 = 1 during READ command at T0.
NOTE 5. CA Parity = Disable, CS to CA Latency = Disable, Read DBI = Disable

Figure 99. Read Burst Operation RL = 11 (AL = 0, CL = 11, BL8)

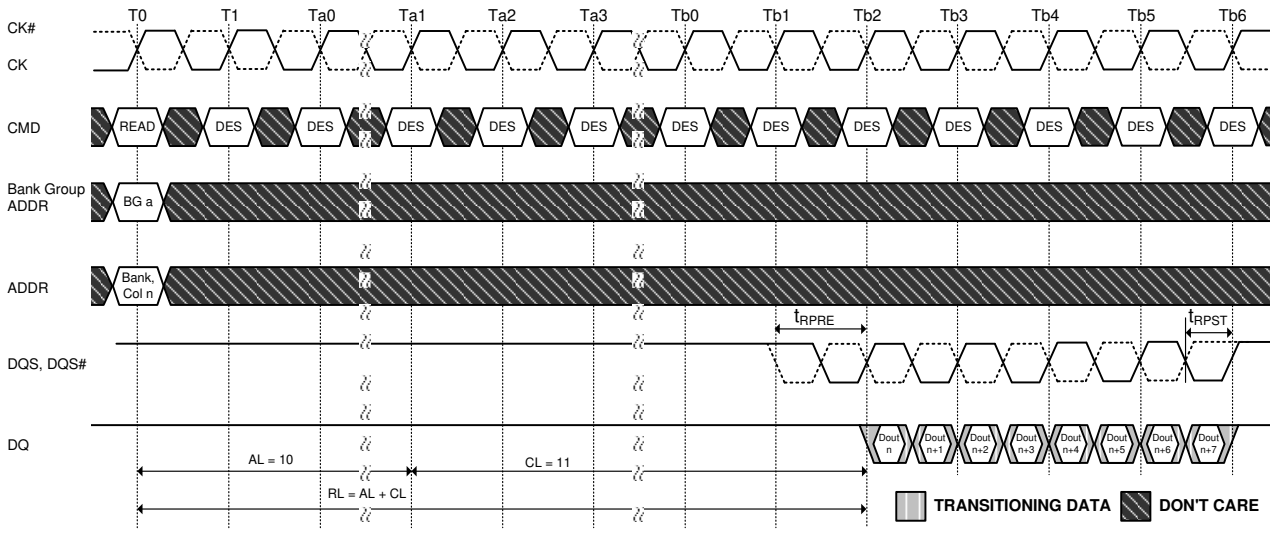

NOTE 1. BL = 8, RL = 21, AL = (CL-1), CL = 11, Preamble = 1tCK
NOTE 2. Dout n = data-out from column n.
NOTE 3. DES commands are shown for ease of illustration; other commands may be valid at these times.
NOTE 4. BL8 setting activated by either MR0[A1:0 = 00] or MR0[A1:0 = 01] and A12 = 1 during READ command at T0.
NOTE 5. CA Parity = Disable, CS to CA Latency = Disable, Read DBI = Disable

Figure 100. Read Burst Operation RL = 21 (AL = 10, CL = 11, BL8)

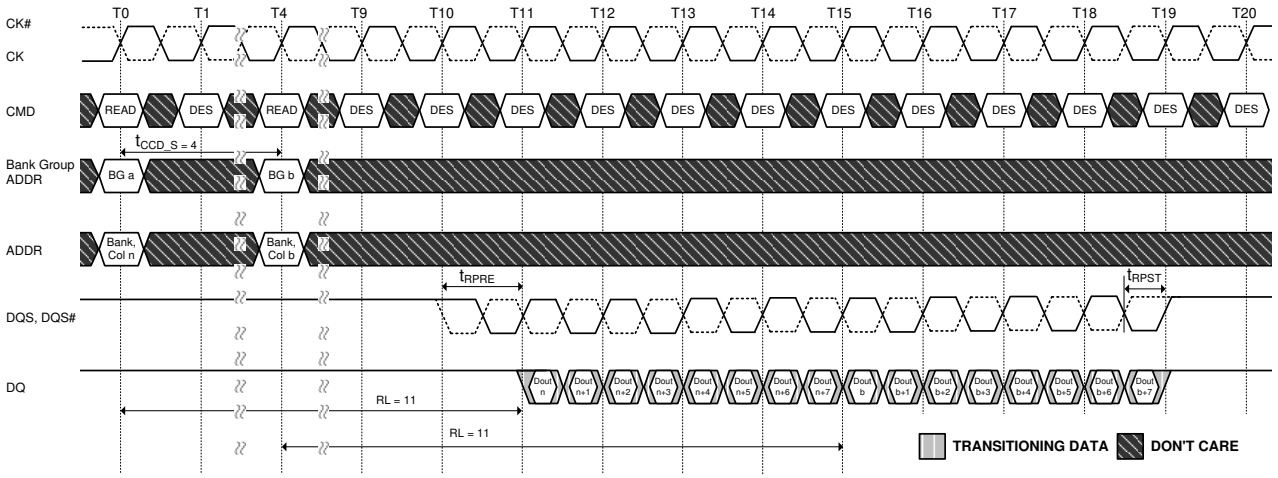

NOTE 1. BL = 8, AL = 0, CL = 11, Preamble = 1tCK
NOTE 2. Dout n (or b) = data-out from column n (or column b).
NOTE 3. DES commands are shown for ease of illustration; other commands may be valid at these times.
NOTE 4. BL8 setting activated by either MR0[A1:A0 = 0:0] or MR0[A1:A0 = 0:1] and A12 = 1 during READ command at T0 and T4.
NOTE 5. CA Parity = Disable, CS to CA Latency = Disable, Read DBI = Disable

Figure 101. Consecutive Read (BL8) with 1t_{CK} Preamble in Different Bank Group

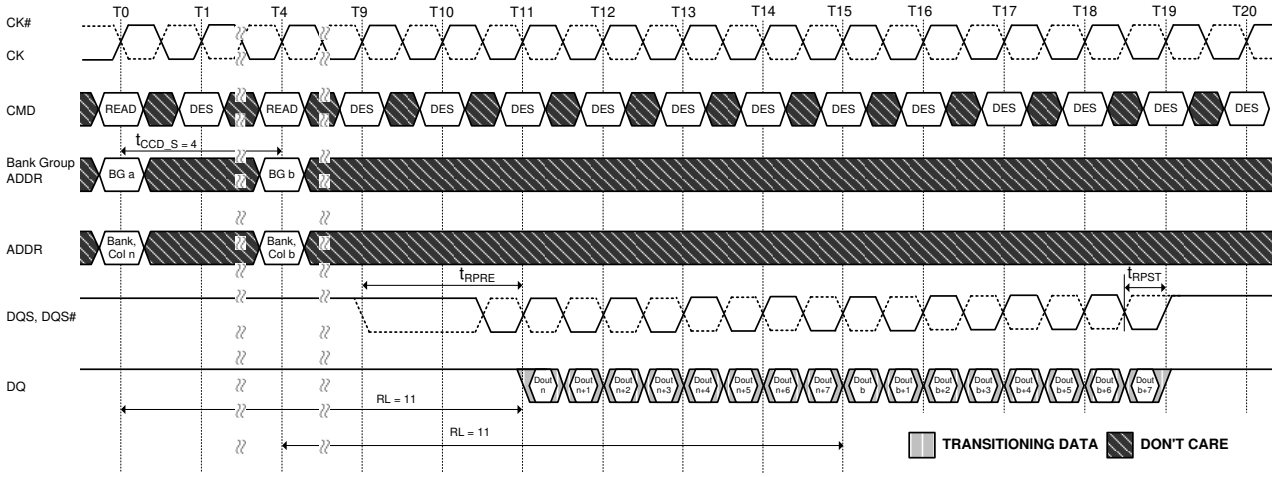

NOTE 1. BL = 8, AL = 0, CL = 11, Preamble = 2tCK
NOTE 2. Dout n (or b) = data-out from column n (or column b).
NOTE 3. DES commands are shown for ease of illustration; other commands may be valid at these times.
NOTE 4. BL8 setting activated by either MR0[A1:A0 = 0:0] or MR0[A1:A0 = 0:1] and A12 = 1 during READ command at T0 and T4.
NOTE 5. CA Parity = Disable, CS to CA Latency = Disable, Read DBI = Disable

Figure 102. Consecutive Read (BL8) with 2t_{CK} Preamble in Different Bank Group

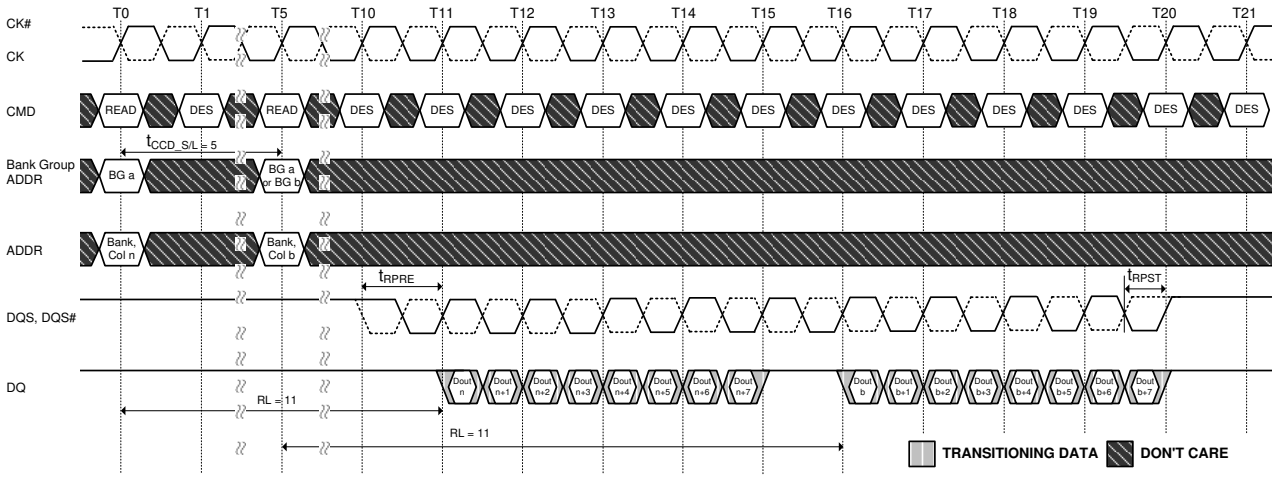

NOTE 1. BL = 8, AL = 0, CL = 11, Preamble = 1tCK, $t_{CCD_S/L}$ = 5
NOTE 2. Dout n (or b) = data-out from column n (or column b).
NOTE 3. DES commands are shown for ease of illustration; other commands may be valid at these times.
NOTE 4. BL8 setting activated by either MR0[A1:A0 = 0:0] or MR0[A1:A0 = 0:1] and A12 = 1 during READ command at T0 and T5.
NOTE 5. CA Parity = Disable, CS to CA Latency = Disable, Read DBI = Disable

Figure 103. Nonconsecutive Read (BL8) with 1t_{CK} Preamble in Same or Different Bank Group

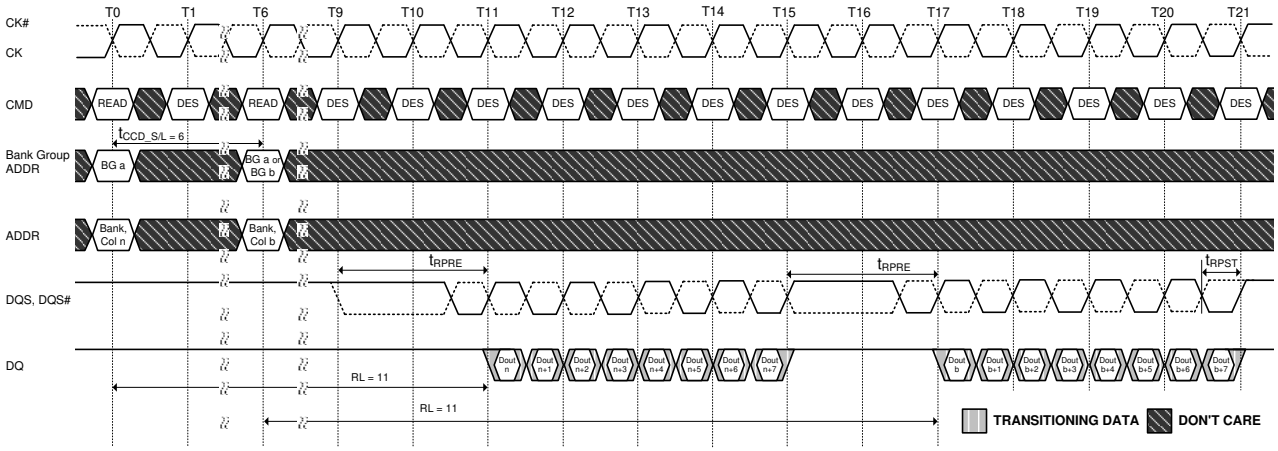

NOTE 1. BL = 8, AL = 0, CL = 11, Preamble = 2tCK, $t_{CCD_S/L}$ = 6
NOTE 2. Dout n (or b) = data-out from column n (or column b).
NOTE 3. DES commands are shown for ease of illustration; other commands may be valid at these times.
NOTE 4. BL8 setting activated by either MR0[A1:A0 = 0:0] or MR0[A1:A0 = 0:1] and A12 = 1 during READ command at T0 and T6.
NOTE 5. CA Parity = Disable, CS to CA Latency = Disable, Read DBI = Disable
NOTE 6. $t_{CCD_S/L}$=5 isn' t allowed in 2t_{CK} preamble mode.

Figure 104. Nonconsecutive Read (BL8) with 2t_{CK} Preamble in Same or Different Bank Group

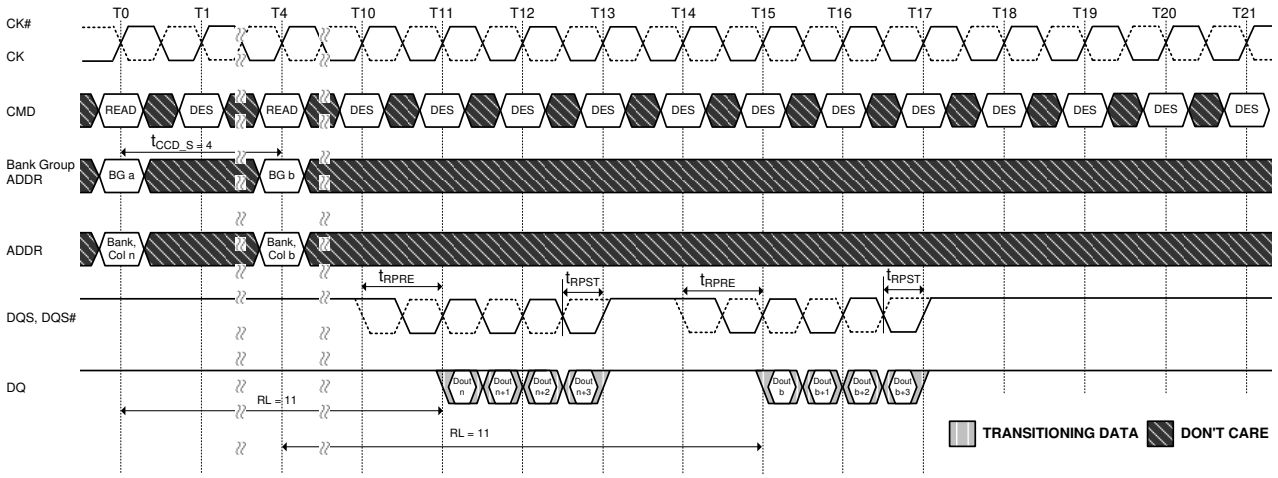

NOTE 1. BL = 8, AL = 0, CL = 11, Preamble = $1t_{CK}$
NOTE 2. Dout n (or b) = data-out from column n (or column b).
NOTE 3. DES commands are shown for ease of illustration; other commands may be valid at these times.
NOTE 4. BC4 setting activated by either MR0[A1:A0 = 1:0] or MR0[A1:A0 = 0:1] and A12 = 0 during READ command at T0 and T4.
NOTE 5. CA Parity = Disable, CS to CA Latency = Disable, Read DBI = Disable

Figure 105. Read (BC4) to Read (BC4) with $1t_{CK}$ Preamble in Different Bank Group

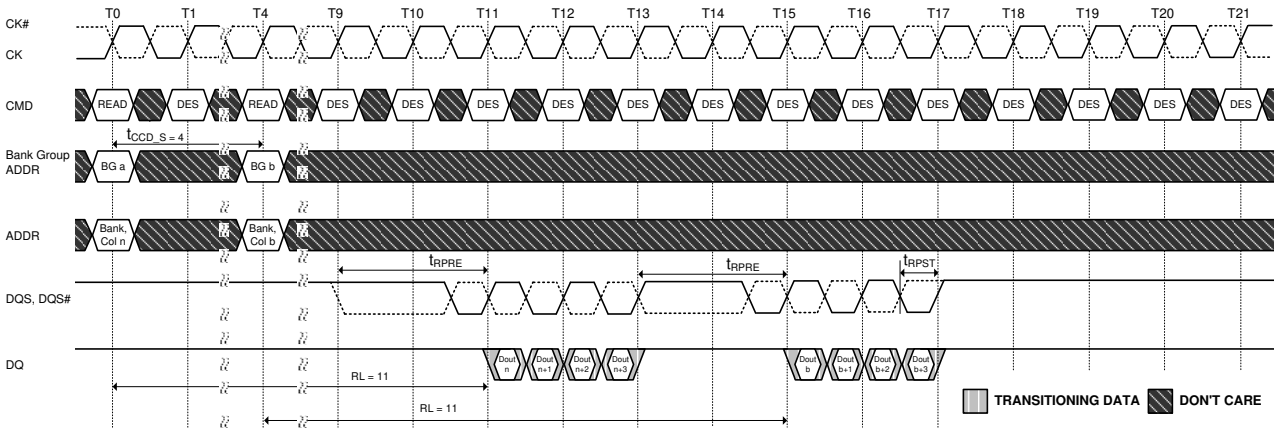

NOTE 1. BL = 8, AL = 0, CL = 11, Preamble = $2t_{CK}$
NOTE 2. Dout n (or b) = data-out from column n (or column b).
NOTE 3. DES commands are shown for ease of illustration; other commands may be valid at these times.
NOTE 4. BC4 setting activated by either MR0[A1:A0 = 1:0] or MR0[A1:A0 = 0:1] and A12 = 0 during READ command at T0 and T4.
NOTE 5. CA Parity = Disable, CS to CA Latency = Disable, Read DBI = Disable

Figure 106. Read (BC4) to Read (BC4) with $2t_{CK}$ Preamble in Different Bank Group

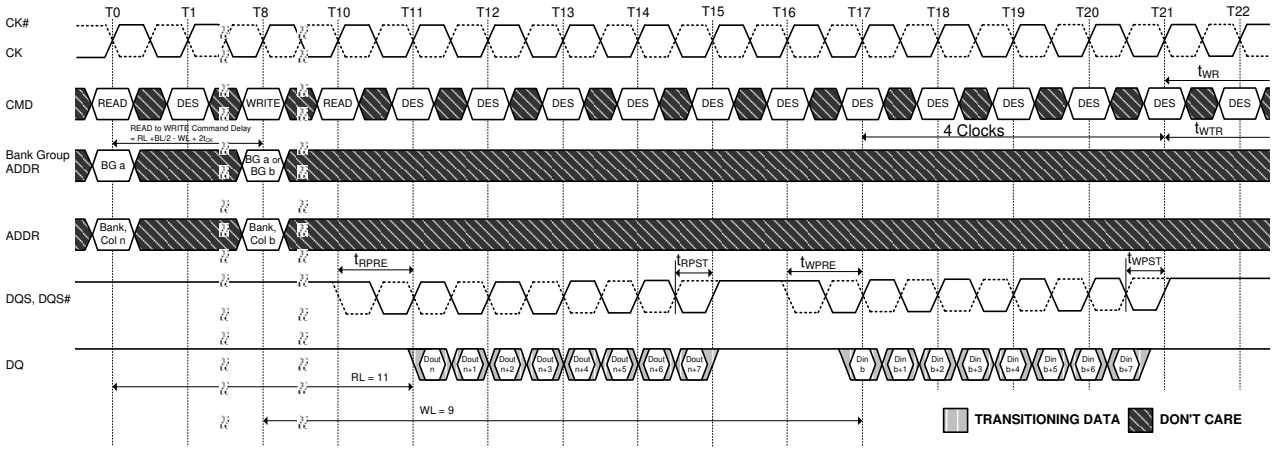

NOTE 1. BL = 8, RL = 11 (CL = 11, AL = 0), Read Preamble = $1t_{CK}$, WL =9 (CWL = 9, AL = 0), Write Preamble = $1t_{CK}$
NOTE 2. Dout n = data-out from column n, DIN b = data-in to column b.
NOTE 3. DES commands are shown for ease of illustration; other commands may be valid at these times.
NOTE 4. BL8 setting activated by either MR0[A1:A0 = 0:0] or MR0[A1:A0 = 0:1] and A12 = 1 during READ command at T0 and WRITE command at T8.
NOTE 5. CA Parity = Disable, CS to CA Latency = Disable, Read DBI = Disable, Write DBI = Disable, Write CRC = Disable.

Figure 107. Read (BL8) to Write (BL8) with $1t_{CK}$ Preamble in Same or Different Bank Group

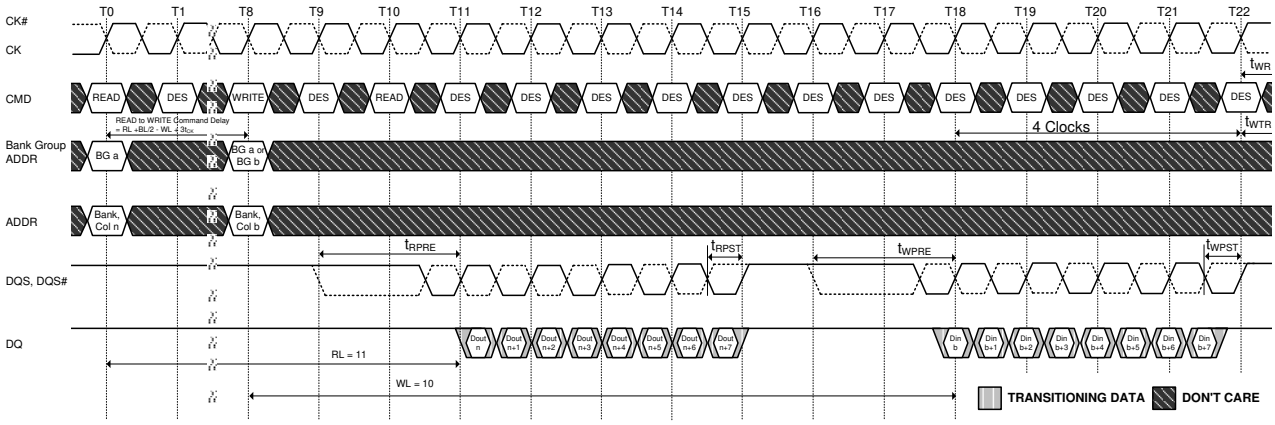

NOTE 1. BL = 8, RL = 11 (CL = 11, AL = 0), Read Preamble = $2t_{CK}$, WL = 10 (CWL = 9+1*5, AL = 0), Write Preamble = $2t_{CK}$
NOTE 2. Dout n = data-out from column n, DIN b = data-in to column b.
NOTE 3. DES commands are shown for ease of illustration; other commands may be valid at these times.
NOTE 4. BL8 setting activated by either MR0[A1:A0 = 0:0] or MR0[A1:A0 = 0:1] and A12 = 1 during READ command at T0 and WRITE command at T8.
NOTE 5. When operating in $2t_{CK}$ Write Preamble Mode, CWL must be programmed to a value at least 1 clock greater than the lowest CWL setting.
NOTE 6. CA Parity = Disable, CS to CA Latency = Disable, Read DBI = Disable, Write DBI = Disable, Write CRC = Disable.

Figure 108. Read (BL8) to Write (BL8) with $2t_{CK}$ Preamble in Same or Different Bank Group

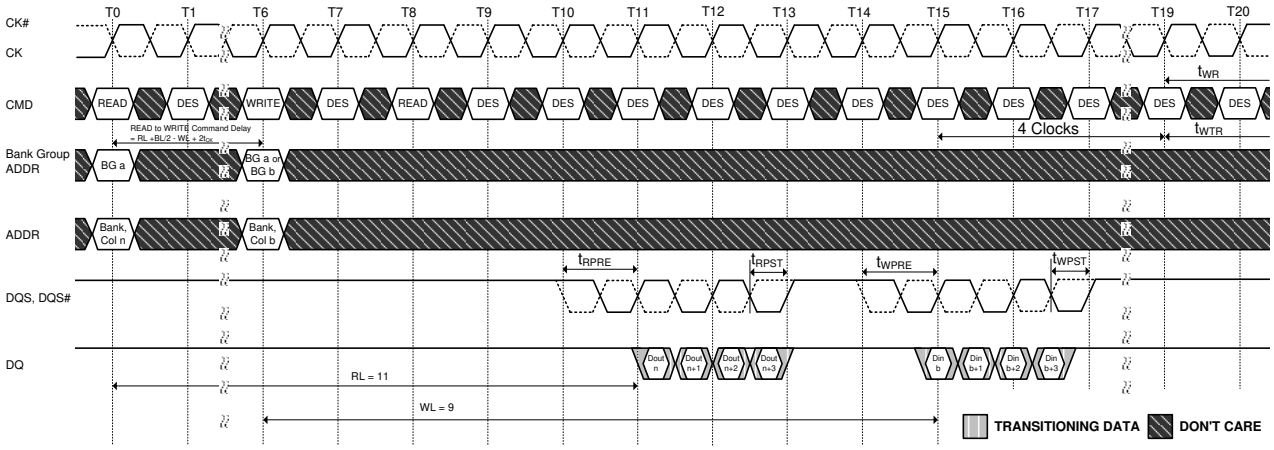

NOTE 1. BC = 4, RL = 11 (CL = 11, AL = 0), Read Preamble = $1t_{CK}$, WL = 9 (CWL = 9, AL = 0), Write Preamble = $1t_{CK}$
NOTE 2. Dout n = data-out from column n, DIN b = data-in to column b.
NOTE 3. DES commands are shown for ease of illustration; other commands may be valid at these times.
NOTE 4. BC4(OTF) setting activated by MR0[A1:A0 = 0:1] and A12 = 0 during READ command at T0 and WRITE command at T6.
NOTE 5. CA Parity = Disable, CS to CA Latency = Disable, Read DBI = Disable, Write DBI = Disable, Write CRC = Disable.

Figure 109. Read (BC4) OTF to Write (BC4) OTF with $1t_{CK}$ Preamble in Same or Different Bank Group

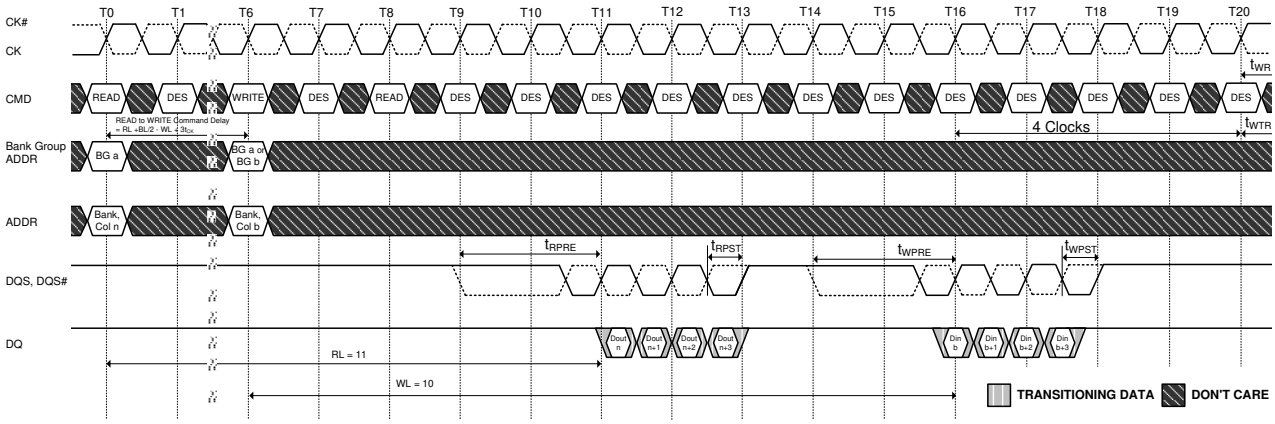

NOTE 1. BC = 4, RL = 11 (CL = 11, AL = 0), Read Preamble = $2t_{CK}$, WL = 10 (CWL = 9+1*5, AL = 0), Write Preamble = $2t_{CK}$
NOTE 2. Dout n = data-out from column n, DIN b = data-in to column b.
NOTE 3. DES commands are shown for ease of illustration; other commands may be valid at these times.
NOTE 4. BC4(OTF) setting activated by MR0[A1:A0 = 0:1] and A12 = 0 during READ command at T0 and WRITE command at T6.
NOTE 5. When operating in $2t_{CK}$ Write Preamble Mode, CWL must be programmed to a value at least 1 clock greater than the lowest CWL setting.
NOTE 6. CA Parity = Disable, CS to CA Latency = Disable, Read DBI = Disable, Write DBI = Disable, Write CRC = Disable.

Figure 110. Read (BC4) OTF to Write (BC4) OTF with $2t_{CK}$ Preamble in Same or Different Bank Group

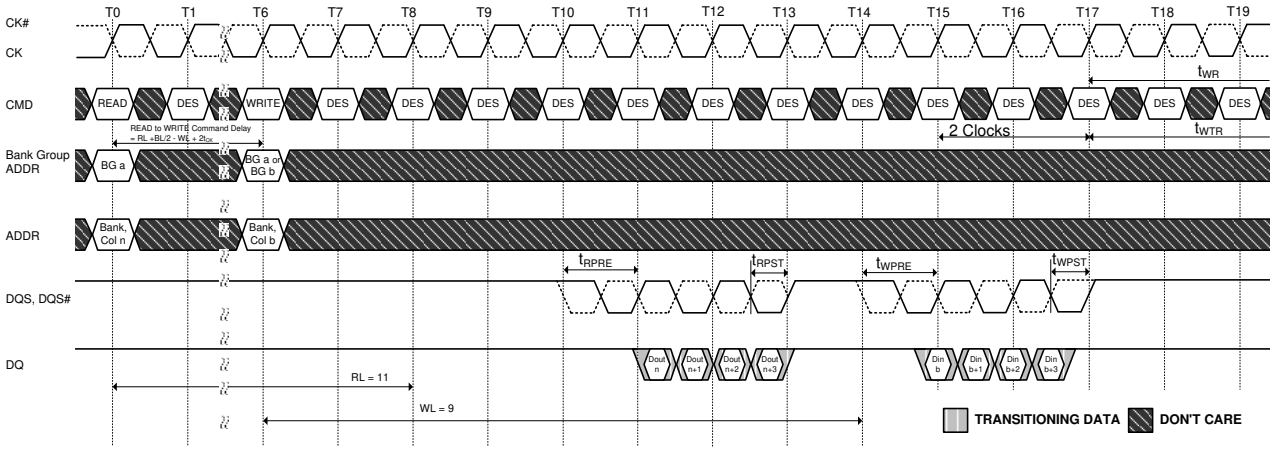

NOTE 1. BC = 4, RL = 11 (CL = 11, AL = 0), Read Preamble = $1t_{CK}$, WL = 9 (CWL = 9, AL = 0), Write Preamble = $1t_{CK}$
NOTE 2. Dout n = data-out from column n, DIN b = data-in to column b.
NOTE 3. DES commands are shown for ease of illustration; other commands may be valid at these times.
NOTE 4. BC4(Fixed) setting activated by MR0[A1:A0 = 1:0].
NOTE 5. CA Parity = Disable, CS to CA Latency = Disable, Read DBI = Disable, Write DBI = Disable, Write CRC = Disable.

Figure 111. Read (BC4) Fixed to Write (BC4) Fixed with $1t_{CK}$ Preamble in Same or Different Bank Group

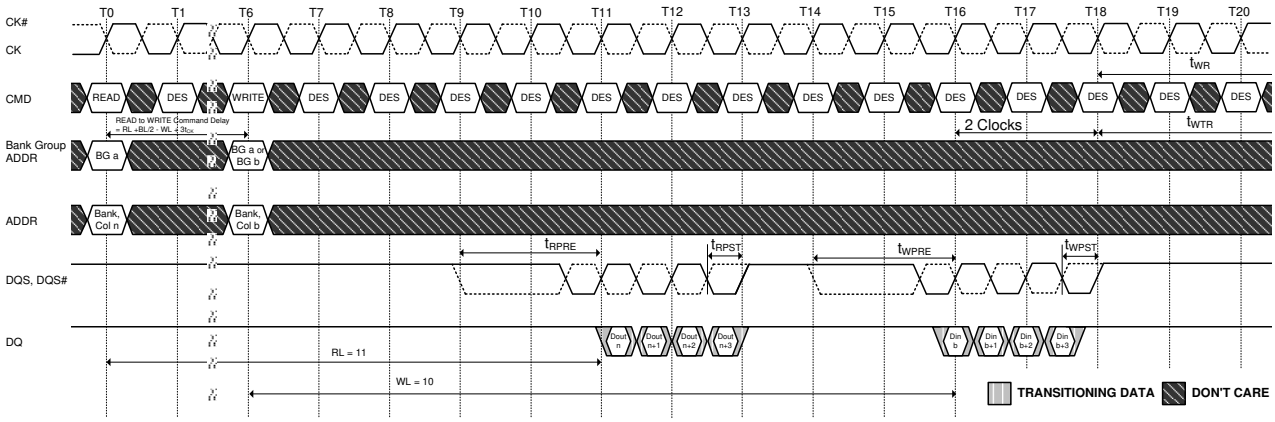

NOTE 1. BC = 4, RL = 11 (CL = 11, AL = 0), Read Preamble = $2t_{CK}$, WL = 10 (CWL = 9+1*5, AL = 0), Write Preamble = $2t_{CK}$
NOTE 2. Dout n = data-out from column n, DIN b = data-in to column b.
NOTE 3. DES commands are shown for ease of illustration; other commands may be valid at these times.
NOTE 4. BC4(Fixed) setting activated by MR0[A1:A0 = 1:0].
NOTE 5. When operating in $2t_{CK}$ Write Preamble Mode, CWL must be programmed to a value at least 1 clock greater than the lowest CWL setting.
NOTE 6. CA Parity = Disable, CS to CA Latency = Disable, Read DBI = Disable, Write DBI = Disable, Write CRC = Disable.

Figure 112. Read (BC4) Fixed to Write (BC4) Fixed with $2t_{CK}$ Preamble in Same or Different Bank Group

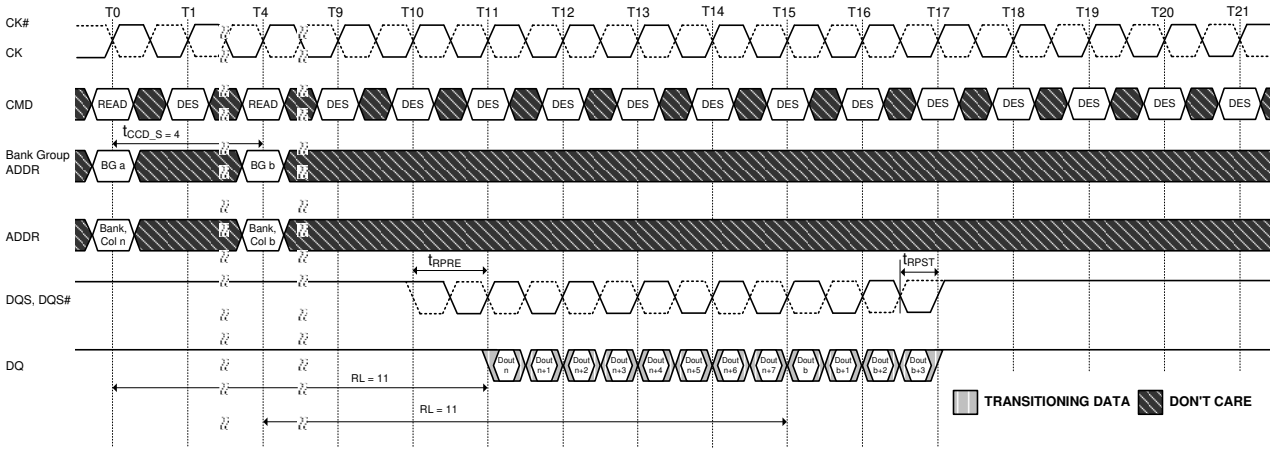

NOTE 1. BL = 8, AL =0, CL = 11 ,Preamble = $1t_{CK}$
NOTE 2. Dout n (or b) = data-out from column n (or column b).
NOTE 3. DES commands are shown for ease of illustration; other commands may be valid at these times.
NOTE 4. BL8 setting activated by MR0[A1:A0 = 0:1] and A12 = 1 during READ command at T0
BC4 setting activated by MR0[A1:A0 = 0:1] and A12 = 0 during READ command at T4.
NOTE 5. CA Parity = Disable, CS to CA Latency = Disable, Read DBI = Disable.

Figure 113. Read (BL8) to Read (BC4) OTF with $1t_{CK}$ Preamble in Different Bank Group

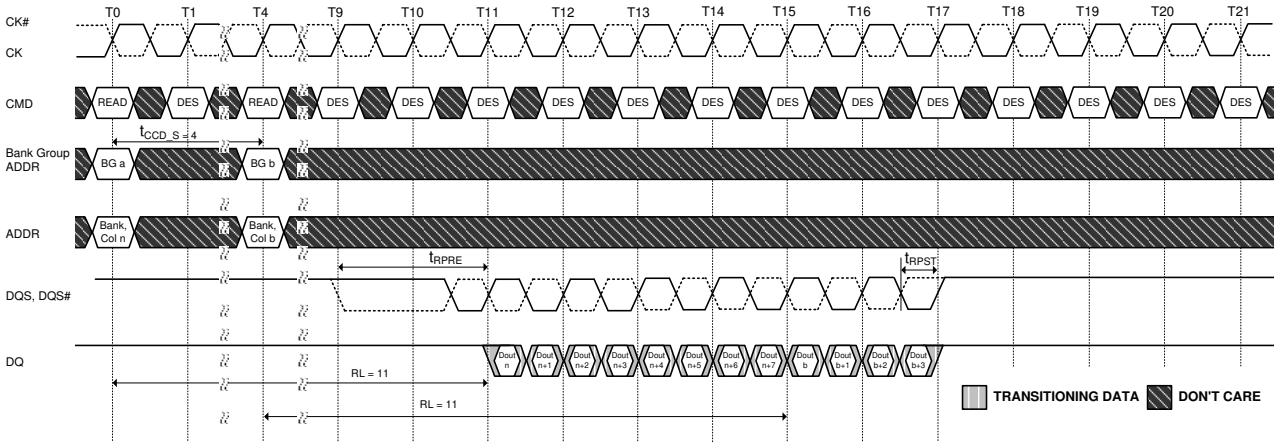

NOTE 1. BL = 8, AL =0, CL = 11 ,Preamble = $2t_{CK}$
NOTE 2. Dout n (or b) = data-out from column n (or column b).
NOTE 3. DES commands are shown for ease of illustration; other commands may be valid at these times.
NOTE 4. BL8 setting activated by MR0[A1:A0 = 0:1] and A12 = 1 during READ command at T0. BC4 setting activated by MR0[A1:A0 = 0:1] and A12 = 0 during READ command at T4.
NOTE 5. CA Parity = Disable, CS to CA Latency = Disable, Read DBI = Disable.

Figure 114. Read (BL8) to Read (BC4) OTF with $2t_{CK}$ Preamble in Different Bank Group

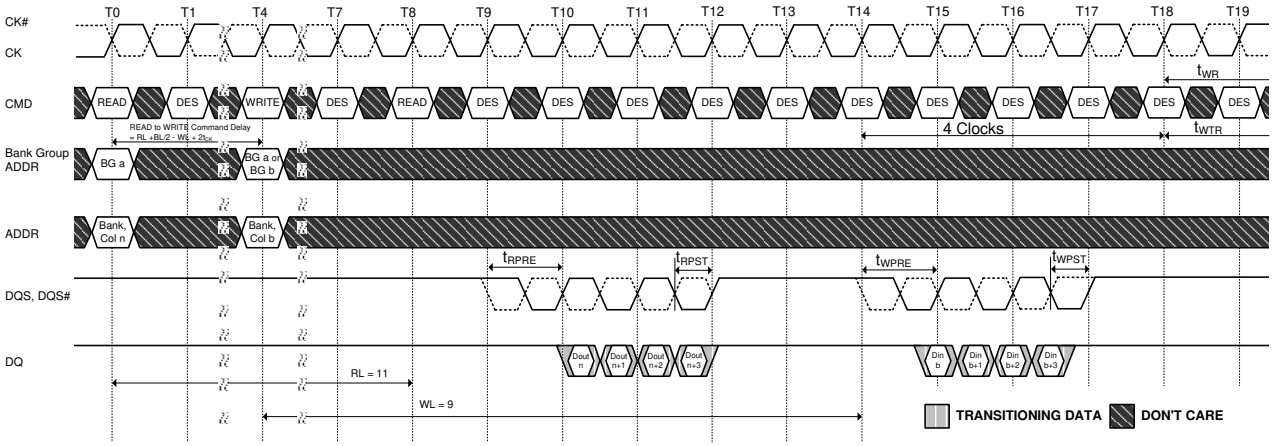

NOTE 1. BC = 4, RL = 11 (CL = 11, AL = 0), Read Preamble = $1t_{CK}$, WL = 9 (CWL = 9, AL = 0), Write Preamble = $1t_{CK}$
NOTE 2. Dout n = data-out from column n, DIN b = data-in to column b.
NOTE 3. DES commands are shown for ease of illustration; other commands may be valid at these times.
NOTE 4. BC4(OTF) setting activated by MR0[A1:A0 = 0:1] and A12 = 0 during READ command at T0 and WRITE command at T6.
NOTE 5. CA Parity = Disable, CS to CA Latency = Disable, Read DBI = Disable, Write DBI = Disable, Write CRC = Disable.

Figure 115. Read (BC4) to Read (BL8) OTF with $1t_{CK}$ Preamble in Different Bank Group

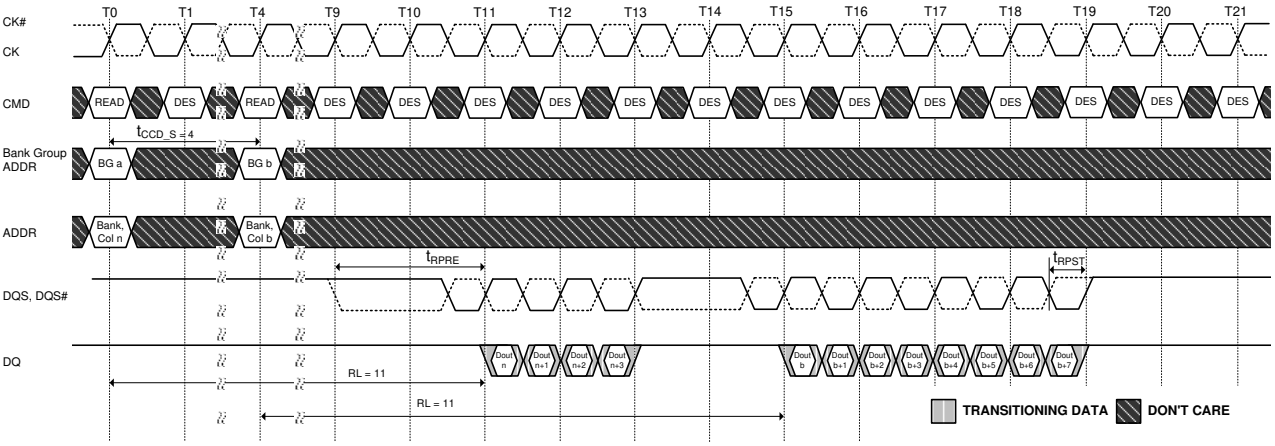

NOTE 1. BL = 8, AL =0, CL = 11 ,Preamble = $2t_{CK}$
NOTE 2. Dout n (or b) = data-out from column n (or column b).
NOTE 3. DES commands are shown for ease of illustration; other commands may be valid at these times.
NOTE 4. BC4 setting activated by MR0[A1:A0 = 0:1] and A12 = 0 during READ command at T0. BL8 setting activated by MR0[A1:A0 = 0:1] and A12 = 1 during READ command at T4.
NOTE 5. CA Parity = Disable, CS to CA Latency = Disable, Read DBI = Disable.

Figure 116. Read (BC4) to Read (BL8) OTF with $2t_{CK}$ Preamble in Different Bank Group

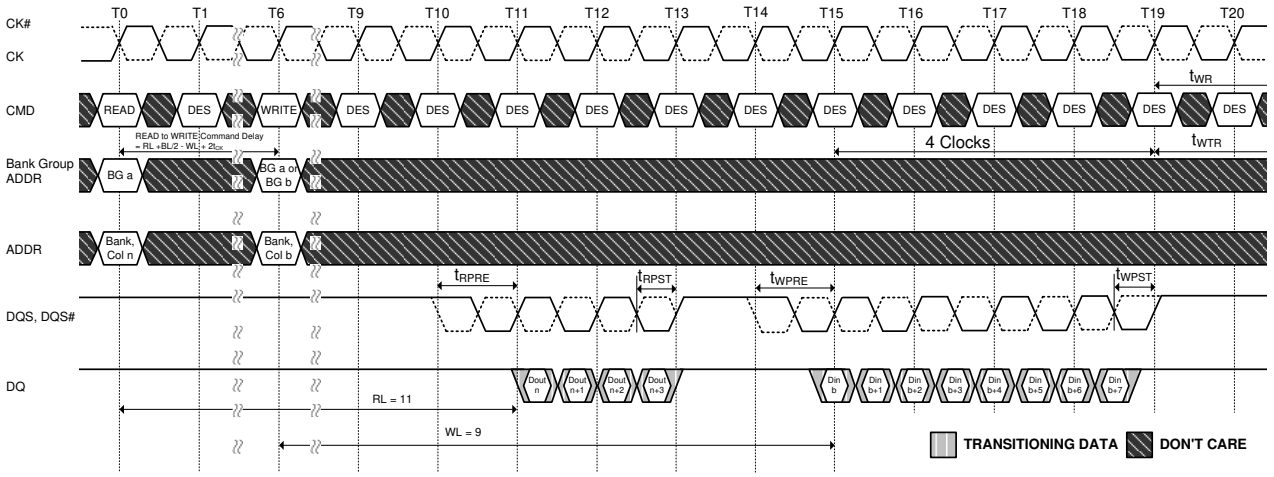

NOTE 1. BC = 4, RL = 11(CL = 11 , AL = 0), Read Preamble = $1t_{CK}$, WL=9(CWL=9,AL=0), Write Preamble = $1t_{CK}$
NOTE 2. Dout n = data-out from column n, DIN b = data-in to column b.
NOTE 3. DES commands are shown for ease of illustration; other commands may be valid at these times.
NOTE 4. BC4 setting activated by MR0[A1:A0 = 0:1] and A12 = 0 during READ command at T0. BL8 setting activated by MR0[A1:A0 = 0:1] and A12 = 1 during WRITE command at T6.
NOTE 5. CA Parity = Disable, CS to CA Latency = Disable, Read DBI = Disable, Write DBI = Disable, Write CRC = Disable.

Figure 117. Read (BC4) to Write (BL8) OTF with $1t_{CK}$ Preamble in Same or Different Bank Group

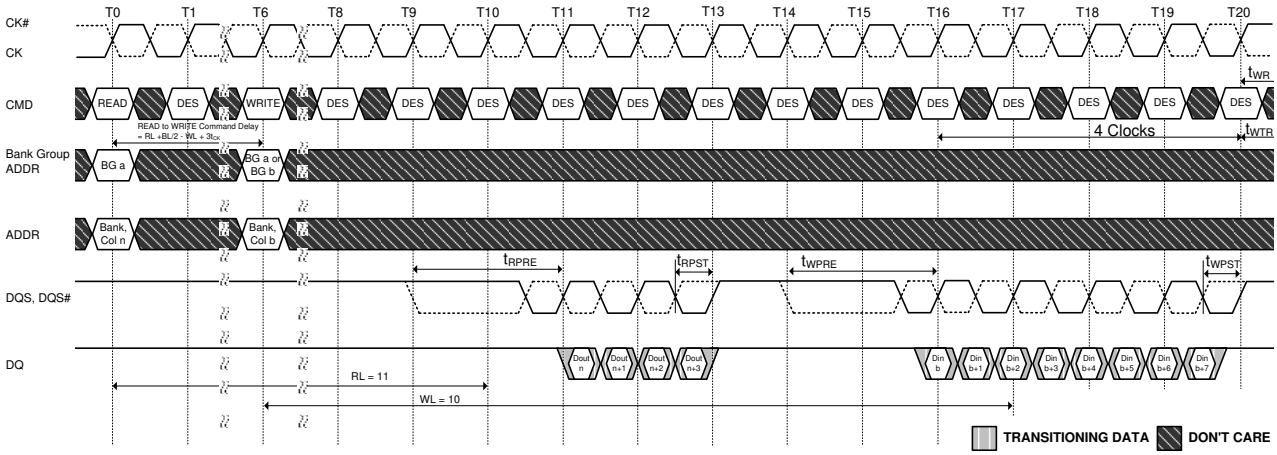

NOTE 1. BC = 4, RL = 11 (CL = 11, AL = 0), Read Preamble = $2t_{CK}$, WL = 10 (CWL = 9+1[5], AL = 0), Write Preamble = $2t_{CK}$
NOTE 2. Dout n = data-out from column n, DIN b = data-in to column b.
NOTE 3. DES commands are shown for ease of illustration; other commands may be valid at these times.
NOTE 4. BC4 setting activated by MR0[A1:A0 = 0:1] and A12 = 0 during READ command at T0. BL8 setting activated by MR0[A1:A0 = 0:1] and A12 = 1 during WRITE command at T6.
NOTE 5. When operating in $2t_{CK}$ Write Preamble Mode, CWL must be programmed to a value at least 1 clock greater than the lowest CWL setting.
NOTE 6. CA Parity = Disable, CS to CA Latency = Disable, Read DBI = Disable, Write DBI = Disable, Write CRC = Disable.

Figure 118. Read (BC4) to Write (BL8) OTF with $2t_{CK}$ Preamble in Same or Different Bank Group

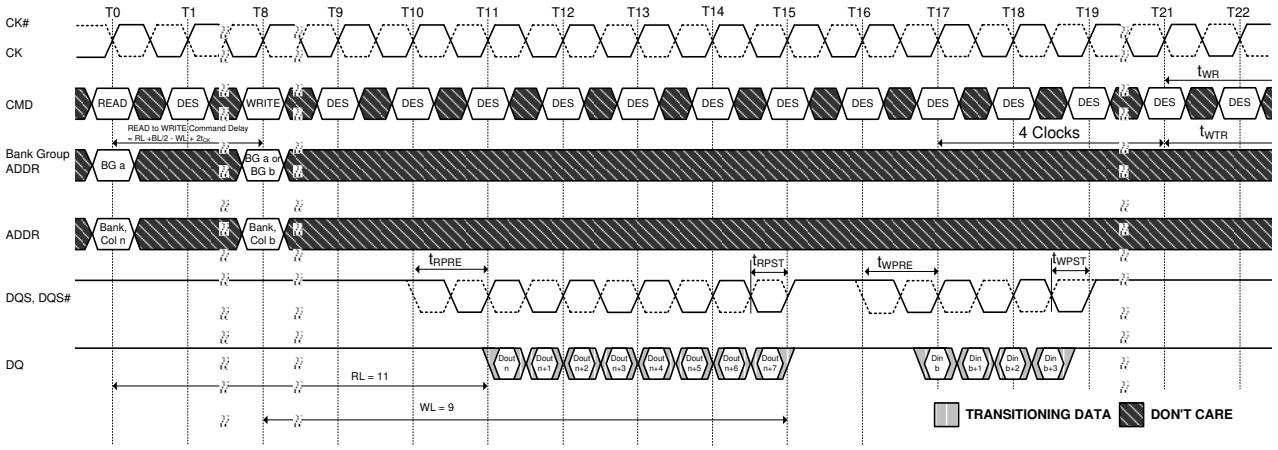

NOTE 1. BL = 8, RL = 11(CL = 11 , AL = 0), Read Preamble = 1tCK, WL=9(CWL=9,AL=0), Write Preamble = 1tCK
NOTE 2. Dout n = data-out from column n, DIN b = data-in to column b.
NOTE 3. DES commands are shown for ease of illustration; other commands may be valid at these times.
NOTE 4. BL8 setting activated by MR0[A1:A0 = 0:1] and A12 = 1 during READ command at T0. BC4 setting activated by MR0[A1:A0 = 0:1] and A12 = 0 during WRITE command at T8.
NOTE 5. CA Parity = Disable, CS to CA Latency = Disable, Read DBI = Disable, Write DBI = Disable, Write CRC = Disable.

Figure 119. Read (BL8) to Write (BC4) OTF with 1t_{CK} Preamble in Same or Different Bank Group

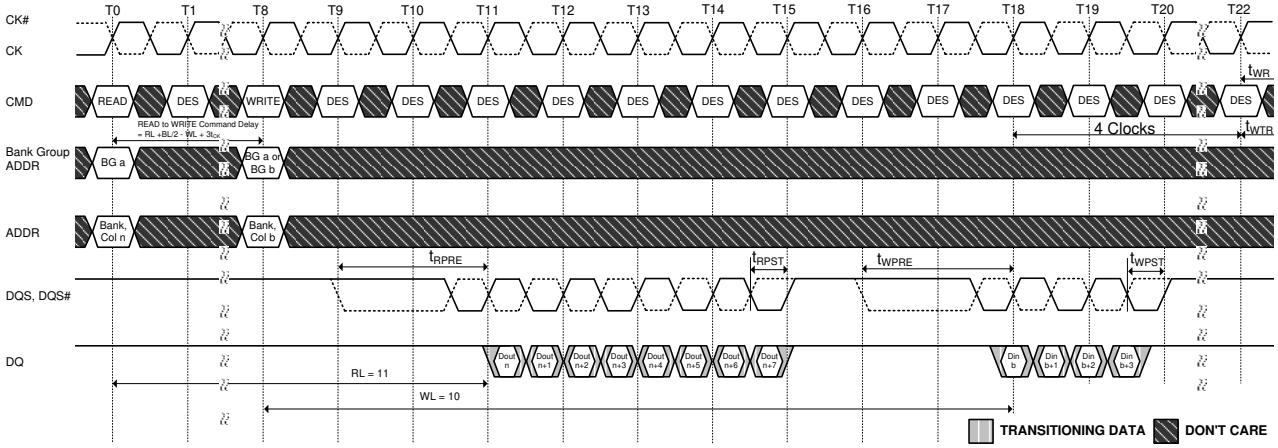

NOTE 1. BL = 8, RL = 11 (CL = 11, AL = 0), Read Preamble = 2t_{CK}, WL = 10 (CWL = 9+1*5, AL = 0), Write Preamble = 2t_{CK}
NOTE 2. Dout n = data-out from column n, DIN b = data-in to column b.
NOTE 3. DES commands are shown for ease of illustration; other commands may be valid at these times.
NOTE 4. BL8 setting activated by MR0[A1:A0 = 0:1] and A12 = 1 during READ command at T0. BC4 setting activated by MR0[A1:A0 = 0:1] and A12 = 0 during WRITE command at T8.
NOTE 5. When operating in 2t_{CK} Write Preamble Mode, CWL must be programmed to a value at least 1 clock greater than the lowest CWL setting.
NOTE 6. CA Parity = Disable, CS to CA Latency = Disable, Read DBI = Disable, Write DBI = Disable, Write CRC = Disable.

Figure 120. Read (BL8) to Write (BC4) OTF with 2t_{CK} Preamble in Same or Different Bank Group

Burst Read Operation followed by a Precharge

The minimum external Read command to Precharge command spacing to the same bank is equal to AL + t_{RTP} with t_{RTP} being the Internal Read Command to Precharge Command Delay. Note that the minimum ACT to PRE timing, t_{RAS}, must be satisfied as well. The minimum value for the Internal Read Command to Precharge Command Delay is given by $t_{RTP(min)}$, A new bank active command may be issued to the same bank if the following two conditions are satisfied simultaneously:

1. The minimum RAS precharge time ($t_{RP.MIN}$) has been satisfied from the clock at which the precharge begins.
2. The minimum RAS cycle time ($t_{RC.MIN}$) from the previous bank activation has been satisfied.

Examples of Read commands followed by Precharge are show in Read to Precharge with 1t_{CK} Preamble to Read to Precharge with Additive Latency and 1t_{CK} Preamble.

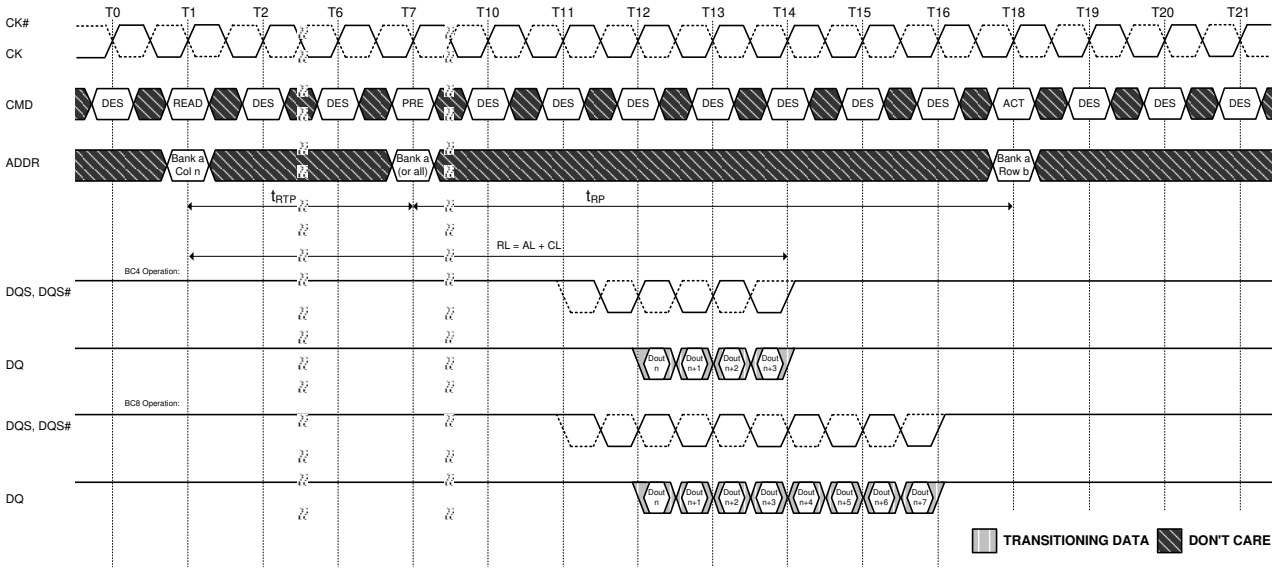

NOTE 1. BL = 8, RL = 11(CL = 11 , AL = 0), Preamble = 1t_{CK}, t_{RTP} = 6, t_{RP} = 11
NOTE 2. Dout n = data-out from column n.
NOTE 3. DES commands are shown for ease of illustration; other commands may be valid at these times.
NOTE 4. The example assumes t_{RAS}. MIN is satisfied at Precharge command time(T7) and that t_{RC}. MIN is satisfied at the next Active command time(T18).
NOTE 5. CA Parity = Disable, CS to CA Latency = Disable, Read DBI = Disable.

Figure 121. Read to Precharge with 1t_{CK} Preamble

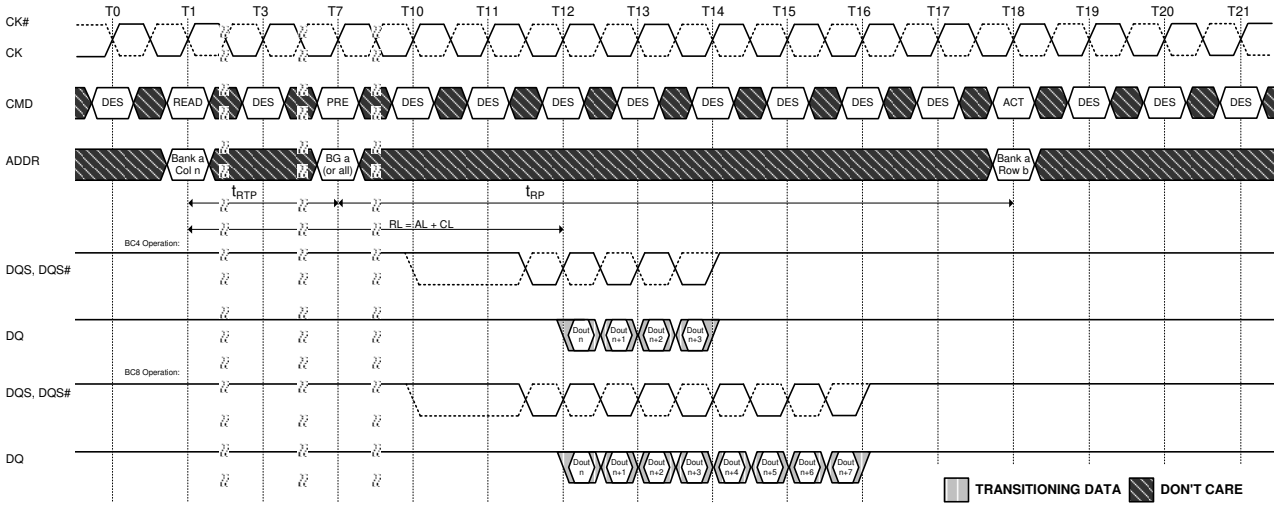

NOTE 1. BL = 8, RL = 11(CL = 11 , AL = 0), Preamble = 2t_{CK}, t_{RTP} = 6, t_{RP} = 11
NOTE 2. Dout n = data-out from column n.
NOTE 3. DES commands are shown for ease of illustration; other commands may be valid at these times.
NOTE 4. The example assumes t_{RAS}. MIN is satisfied at Precharge command time(T7) and that t_{RC}. MIN is satisfied at the next Active command time(T18).
NOTE 5. CA Parity = Disable, CS to CA Latency = Disable, Read DBI = Disable.

Figure 122. Read to Precharge with 2t_{CK} Preamble

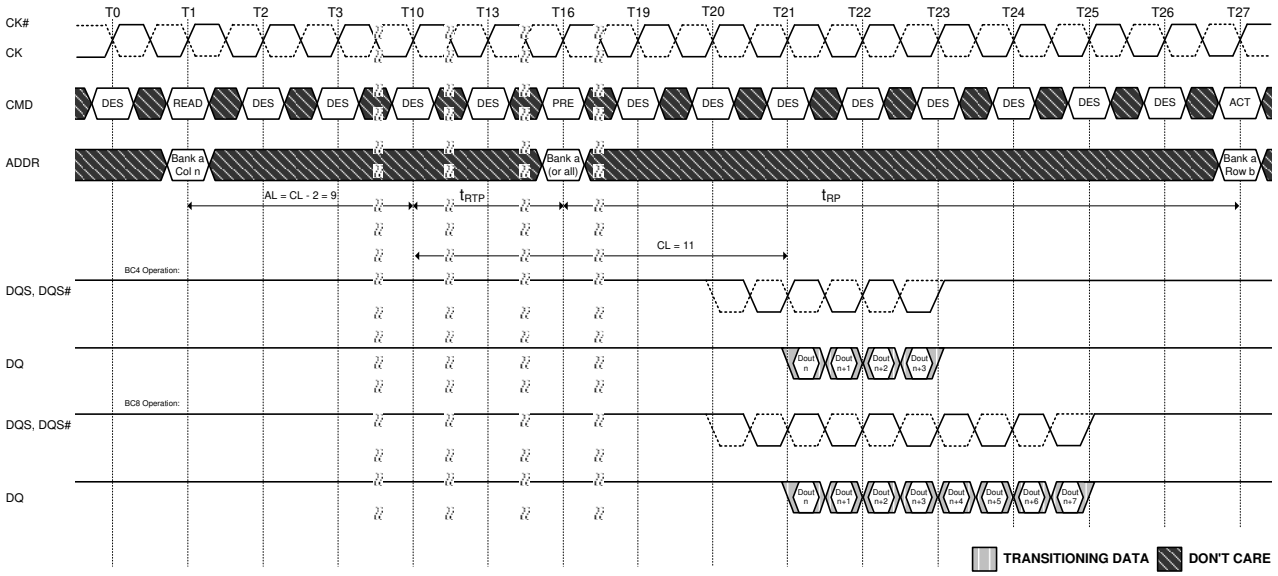

NOTE 1. BL = 8, RL = 20 (CL = 11 , AL = CL- 2), Preamble = $1t_{CK}$, t_{RTP} = 6, t_{RP} = 11
NOTE 2. Dout n = data-out from column n.
NOTE 3. DES commands are shown for ease of illustration; other commands may be valid at these times.
NOTE 4. The example assumes t_{RAS}. MIN is satisfied at Precharge command time(T16) and that t_{RC}. MIN is satisfied at the next Active command time(T27).
NOTE 5. CA Parity = Disable, CS to CA Latency = Disable, Read DBI = Disable.

Figure 123. Read to Precharge with Additive Latency and $1t_{CK}$ Preamble

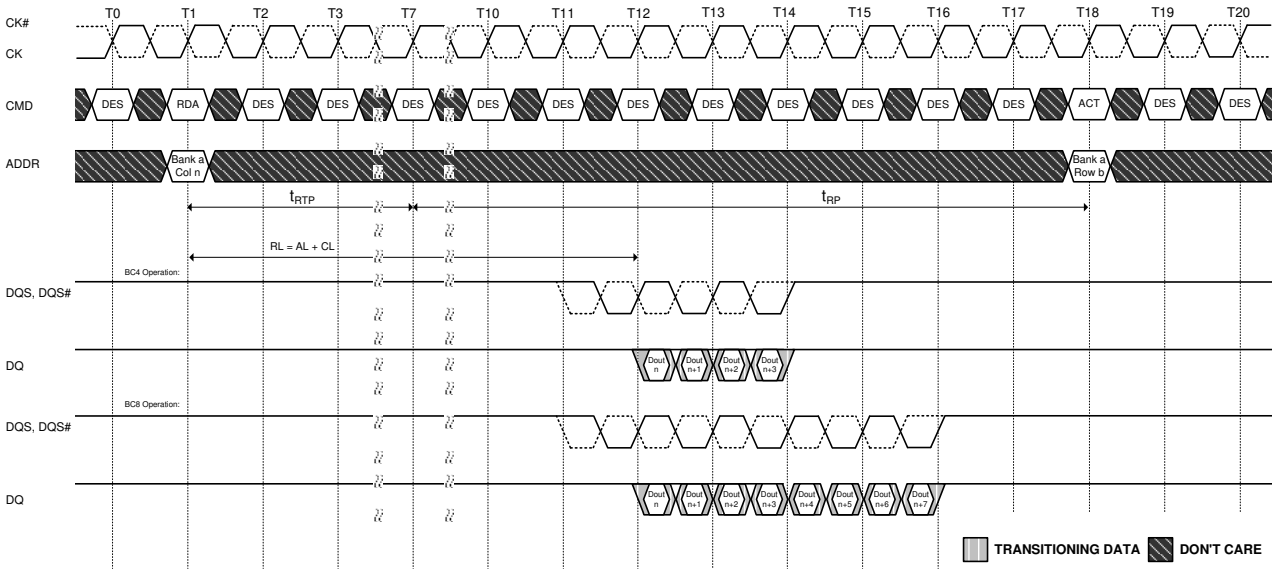

NOTE 1. BL = 8, RL = 11 (CL = 11 , AL = 0), Preamble = $1t_{CK}$, t_{RTP} = 6, t_{RP} = 11
NOTE 2. Dout n = data-out from column n.
NOTE 3. DES commands are shown for ease of illustration; other commands may be valid at these times.
NOTE 4. t_{RTP} = 6 setting activated by MR0[A11:9 = 001]
NOTE 5. The example assumes t_{RC}. MIN is satisfied at the next Active command time(T18).
NOTE 6. CA Parity = Disable, CS to CA Latency = Disable, Read DBI = Disable.

Figure 124. Read with Auto Precharge and $1t_{CK}$ Preamble

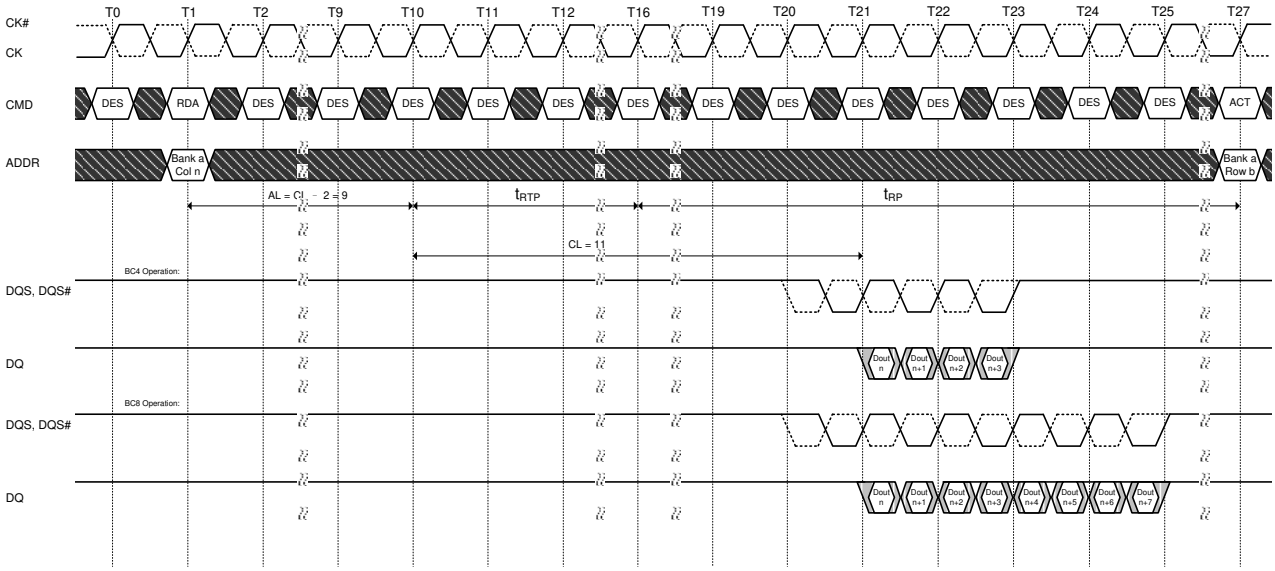

NOTE 1. BL = 8, RL = 20 (CL = 11 , AL = CL- 2), Preamble = $1t_{CK}$, tRTP = 6, t_{RP} = 11
NOTE 2. Dout n = data-out from column n.
NOTE 3. DES commands are shown for ease of illustration; other commands may be valid at these times.
NOTE 4. t_{RTP} = 6 setting activated by MR0[A11:9 = 001]
NOTE 5. The example assumes tRC. MIN is satisfied at the next Active command time(T27).
NOTE 6. CA Parity = Disable, CS to CA Latency = Disable, Read DBI = Disable.

TRANSITIONING DATA DON'T CARE

Figure 125. Read with Auto Precharge, Additive Latency and $1t_{CK}$ Preamble

Burst Read Operation with Read DBI (Data Bus Inversion)

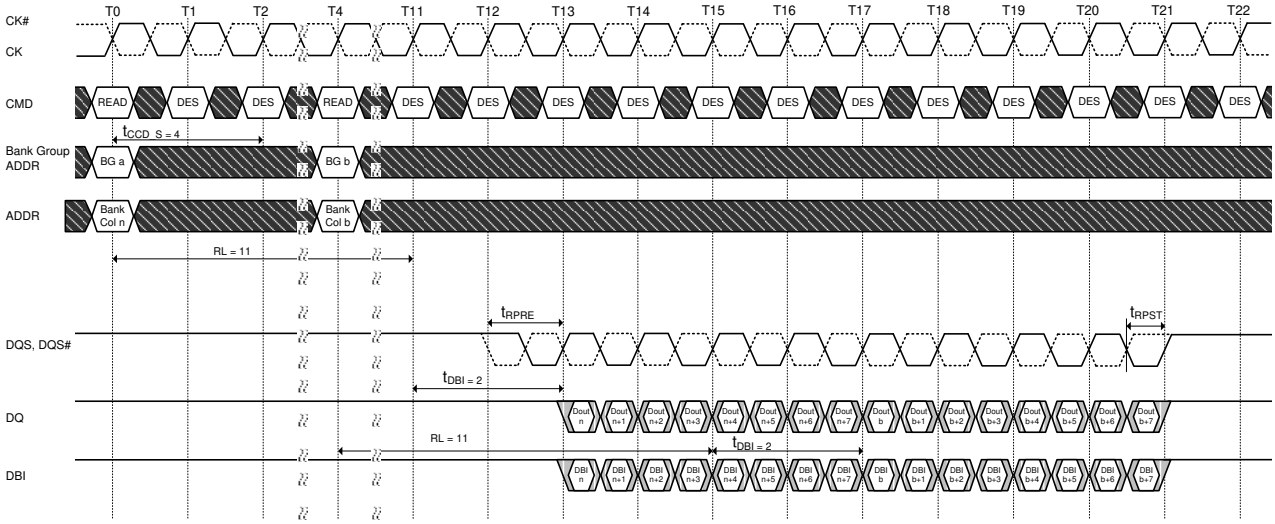

NOTE 1. BL = 8, AL = 0, CL = 11, Preamble = $1t_{CK}$, tDBI = $2t_{CK}$
NOTE 2. Dout n (or b) = data-out from column n (or column b).
NOTE 3. DES commands are shown for ease of illustration; other commands may be valid at these times.
NOTE 4. BL8 setting activated by either MR0[A1:A0 = 00] or MR0[A1:A0 = 0:1] and A12 = 1 during READ command at T0 and T4.
NOTE 5. CA Parity = Disable, CS to CA Latency = Disable, Read DBI = Enable.

TRANSITIONING DATA DON'T CARE

Figure 126. Consecutive Read (BL8) with $1t_{CK}$ Preamble and DBI in Different Bank Group

Burst Read Operation with Command/Address Parity

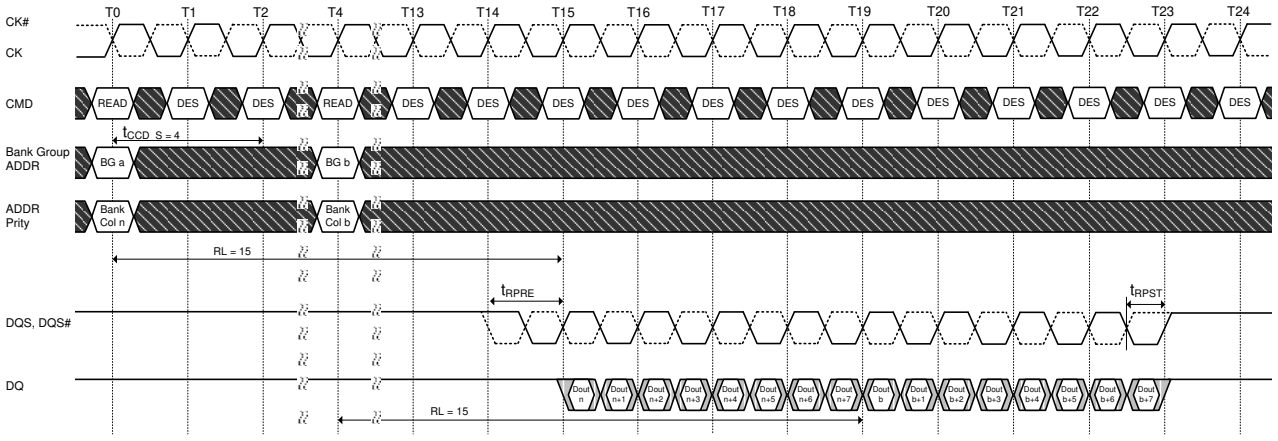

NOTE 1. BL = 8, AL = 0, CL = 11, PL = 4, (RL = CL + AL + PL = 15), Preamble = $1t_{CK}$
NOTE 2. Dout n (or b) = data-out from column n (or column b).
NOTE 3. DES commands are shown for ease of illustration; other commands may be valid at these times.
NOTE 4. BL8 setting activated by either MR0[A1:A0 = 0:0] or MR0[A1:A0 = 0:1] and A12 = 1 during READ command at T0 and T4.
NOTE 5. CA Parity =Enable, CS to CA Latency = Disable, Read DBI = Disable.

Figure 127. Consecutive Read (BL8) with $1t_{CK}$ Preamble and CA Parity in Different Bank Group

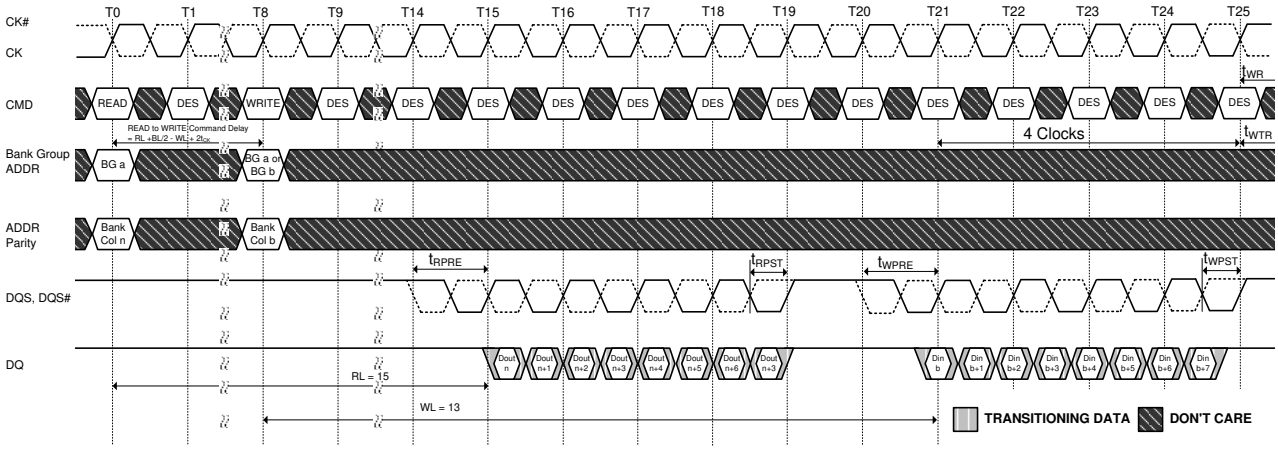

NOTE 1. BC = 4, RL = 11(CL = 11 , AL = 0), Read Preamble = $1t_{CK}$, WL=9(CWL=9,AL=0), Write Preamble = $1t_{CK}$
NOTE 2. Dout n = data-out from column n, Din b = data-in to column b.
NOTE 3. DES commands are shown for ease of illustration; other commands may be valid at these times.
NOTE 4. BC4 setting activated by MR0[A1:A0 = 0:1] and A12 = 0 during READ command at T0. BL8 setting activated by MR0[A1:A0 = 0:1] and A12 = 1 during WRITE command at T6.
NOTE 5. CA Parity = Disable, CS to CA Latency = Disable, Read DBI = Disable, Write DBI = Disable, Write CRC = Disable.

Figure 128. Read (BL8) to Write (BL8) with $1t_{CK}$ Preamble and CA parity in Same or Different Bank Group

Read to Write with Write CRC

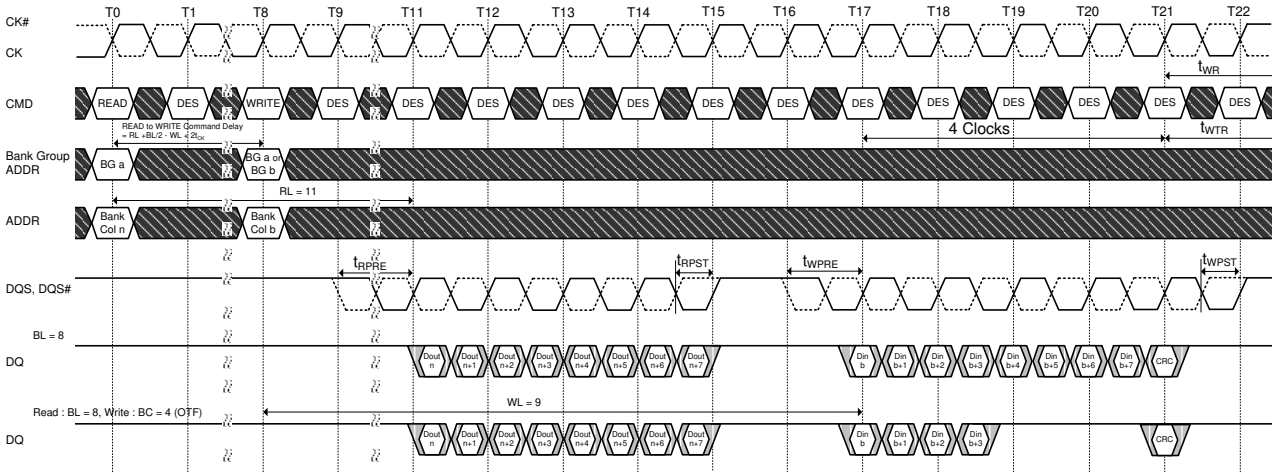

NOTE 1. BL = 8 (or BC = 4 : OTF for Write), RL = 11 (CL = 11, AL = 0), Read Preamble = 1tCK, WL=9 (CWL=9, AL=0), Write Preamble = $1t_{CK}$
NOTE 2. Dout n = data-out from column n. Din b = data-in to column b.
NOTE 3. DES commands are shown for ease of illustration; other commands may be valid at these times.
NOTE 4. BL8 setting activated by either MR0[A1:A0 = 0:0] or MR0[A1:A0 = 0:1] and A12 = 1 during READ command at T0 and Write command at T8.
NOTE 5. BC4 setting activated by MR0[A1:0 = 01] and A12 = 0 during Write command at T8.
NOTE 6. CA Parity = Disable, CS to CA Latency = Disable, Read DBI = Disable, Write DBI = Disable, Write CRC = Enable.

Figure 129. Read (BL8) to Write (BL8 or BC4: OTF) with $1t_{CK}$ Preamble and Write CRC in Same or Different Bank Group

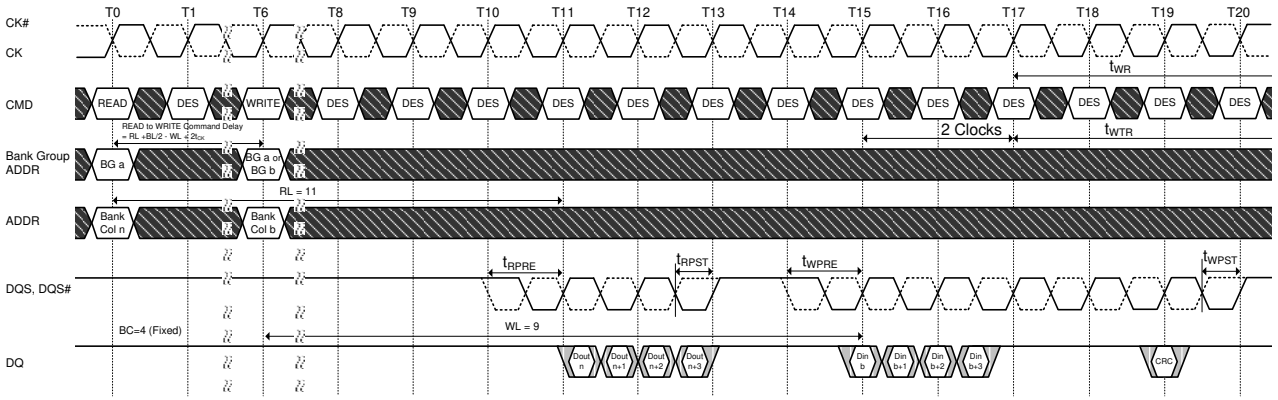

NOTE 1. BC = 4 (Fixed), RL = 11 (CL = 11, AL = 0), Read Preamble = $1t_{CK}$, WL=9 (CWL=9, AL=0), Write Preamble = $1t_{CK}$
NOTE 2. Dout n = data-out from column n. Din b = data-in to column b.
NOTE 3. DES commands are shown for ease of illustration; other commands may be valid at these times.
NOTE 4. BC4 setting activated by MR0[A1:A0 = 1:0].
NOTE 5. CA Parity = Disable, CS to CA Latency = Disable, Read DBI = Disable, Write DBI = Disable, Write CRC = Enable.

Figure 130. Read (BC4:Fixed) to Write (BC4: Fixed) with $1t_{CK}$ Preamble and Write CRC in Same or Different Bank Group

Read to Read with CS to CA Latency

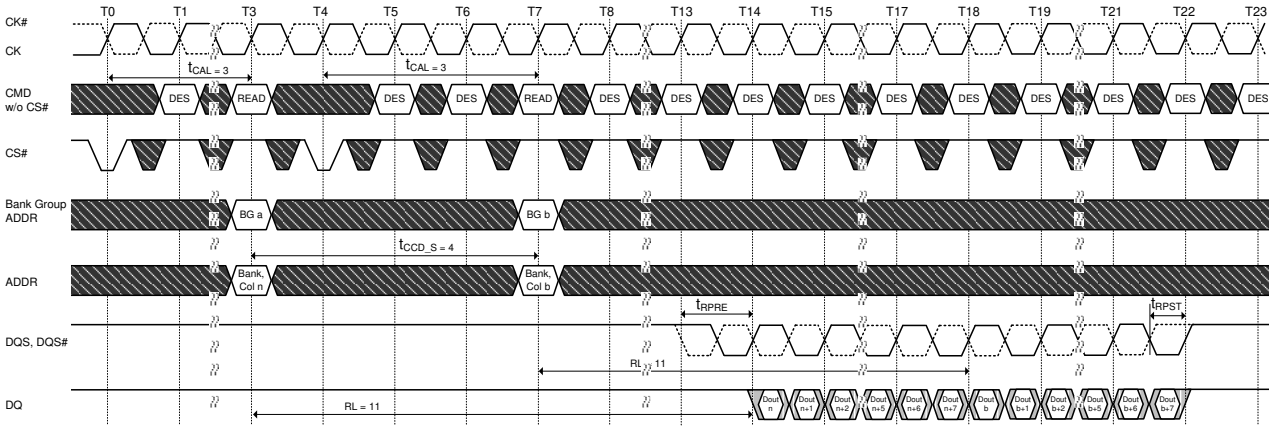

NOTE 1. BL = 8 ,AL = 0, CL = 11, CAL = 3, Preamble = $1t_{CK}$
NOTE 2. Dout n (or b) = data-out from column n (or column b).
NOTE 3. DES commands are shown for ease of illustration; other commands may be valid at these times.
NOTE 4. BL8 setting activated by either MR0[A1:A0 = 0:0] or MR0[A1:A0 = 0:1] and A12 = 1 during READ command at T3 and T7.
NOTE 5. CA Parity = Disable, CS to CA Latency = Enable, Read DBI = Disable.
NOTE 6. Enabling of CAL mode does not impact ODT control timings. Users should maintain the same timing relationship relative to the command/address bus as when CAL is disabled.

Figure 131. Consecutive Read (BL8) with CAL(3) and $1t_{CK}$ Preamble in Different Bank Group

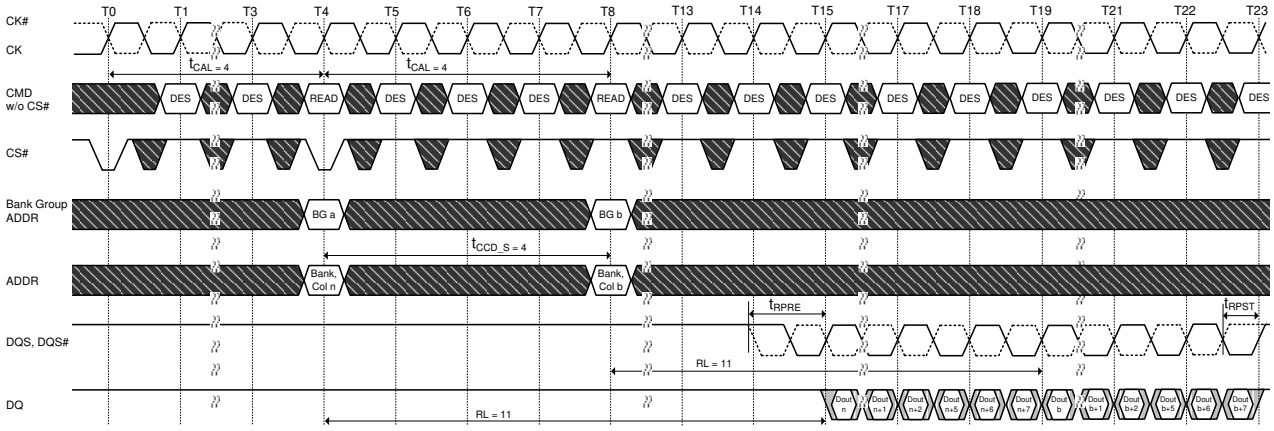

NOTE 1. BL = 8 ,AL = 0, CL = 11, CAL = 4, Preamble = $1t_{CK}$
NOTE 2. Dout n (or b) = data-out from column n (or column b).
NOTE 3. DES commands are shown for ease of illustration; other commands may be valid at these times.
NOTE 4. BL8 setting activated by either MR0[A1:A0 = 0:0] or MR0[A1:A0 = 0:1] and A12 = 1 during READ command at T4 and T8.
NOTE 5. CA Parity = Disable, CS to CA Latency = Enable, Read DBI = Disable.
NOTE 6. Enabling of CAL mode does not impact ODT control timings. Users should maintain the same timing relationship relative to the command/ address bus as when CAL is disabled.

Figure 132. Consecutive Read (BL8) with CAL(4) and $1t_{CK}$ Preamble in Different Bank Group

Write Operation

Write Timing Definitions

This drawing is for example only to enumerate the strobe edges that “belong” to a Write burst. No actual timing violations are shown here. For a valid burst all timing parameters for each edge of a burst need to be satisfied (not only for one edge - as shown).

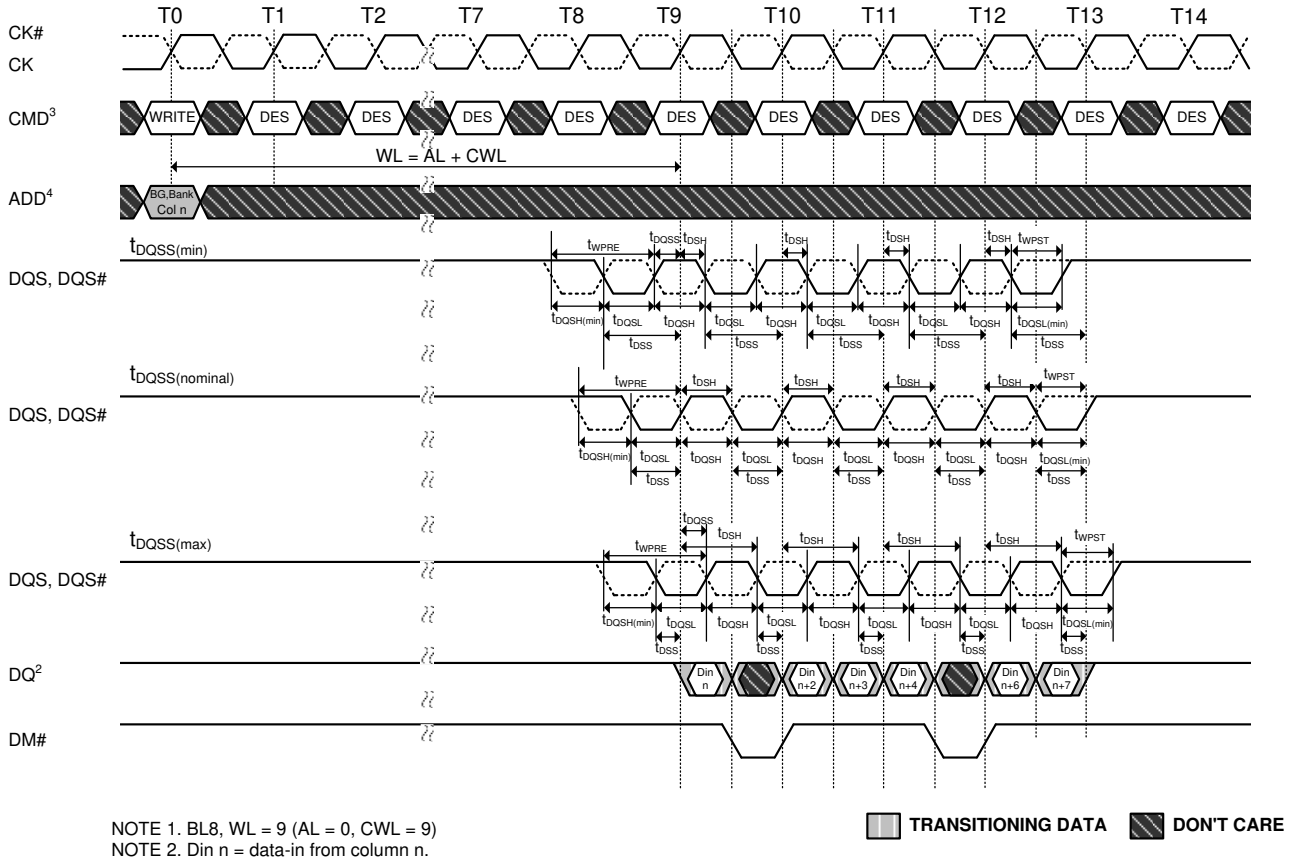

NOTE 1. BL8, WL = 9 (AL = 0, CWL = 9)
NOTE 2. Din n = data-in from column n.
NOTE 3. DES commands are shown for ease of illustration : other commands may be valid at these times.
NOTE 4. BL8 stting activated by either MR0[A1:0=00] or MR0[A1:0=01] and A12=1 during WRITE command at T0.
NOTE 5. t_{DQSS} must be met at each rising clock edge.

Figure 133. Write Timing Definition and Parameters with 1t_{CK} Preamble

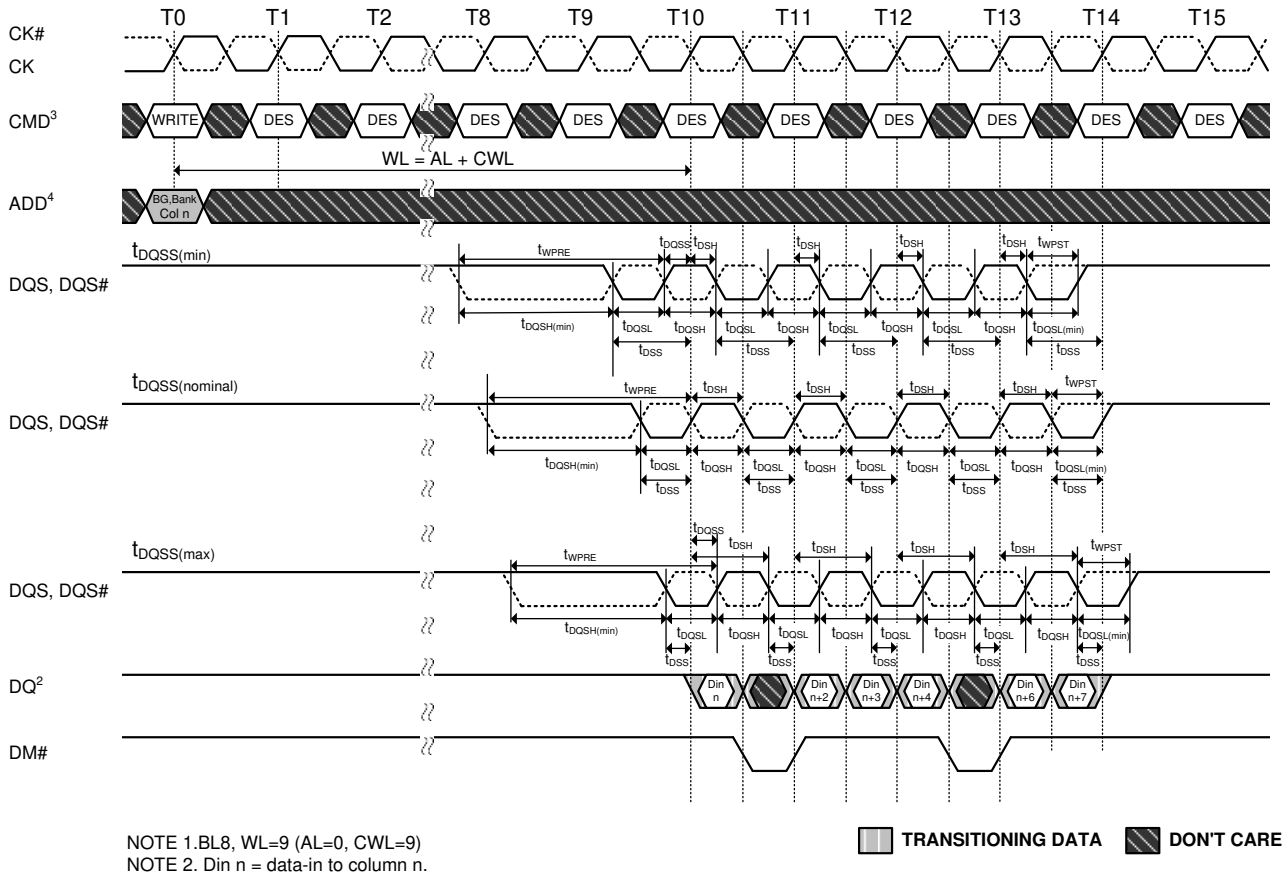

NOTE 1.BL8, WL=9 (AL=0, CWL=9)
NOTE 2. Din n = data-in to column n.
NOTE 3. DES commands are shown for ease of illustration : other commands may be valid at these times.
NOTE 4. BL8 stting activated by either MR0[A1:0=00] or MR0[A1:0=01] and A12=1 during WRITE command at T0.
NOTE 5. t_{DQSS} must be met at each rising clock edge.

Figure 134. Write Timing Definition and Parameters with 2t_{CK} Preamble

Write Data Mask

One write data mask (DM#) pin for each 8 data bits (DQ) will be supported on DDR4 SDRAMs, consistent with the implementation on DDR3 SDRAMs. It has identical timings on write operations as the data bits as shown above, and though used in a unidirectional manner, is internally loaded identically to data bits to ensure matched system timing. DM# is not used during read cycles, however, DM# of x8 bit organization can be used as TDQS during write cycles if enabled by the MR1[A11] setting and x8 organization as DBI# during write cycles if enabled by the MR5[A11] setting. For more detail see section "Data Mask (DM), Data Bus Inversion (DBI) and TDQS".

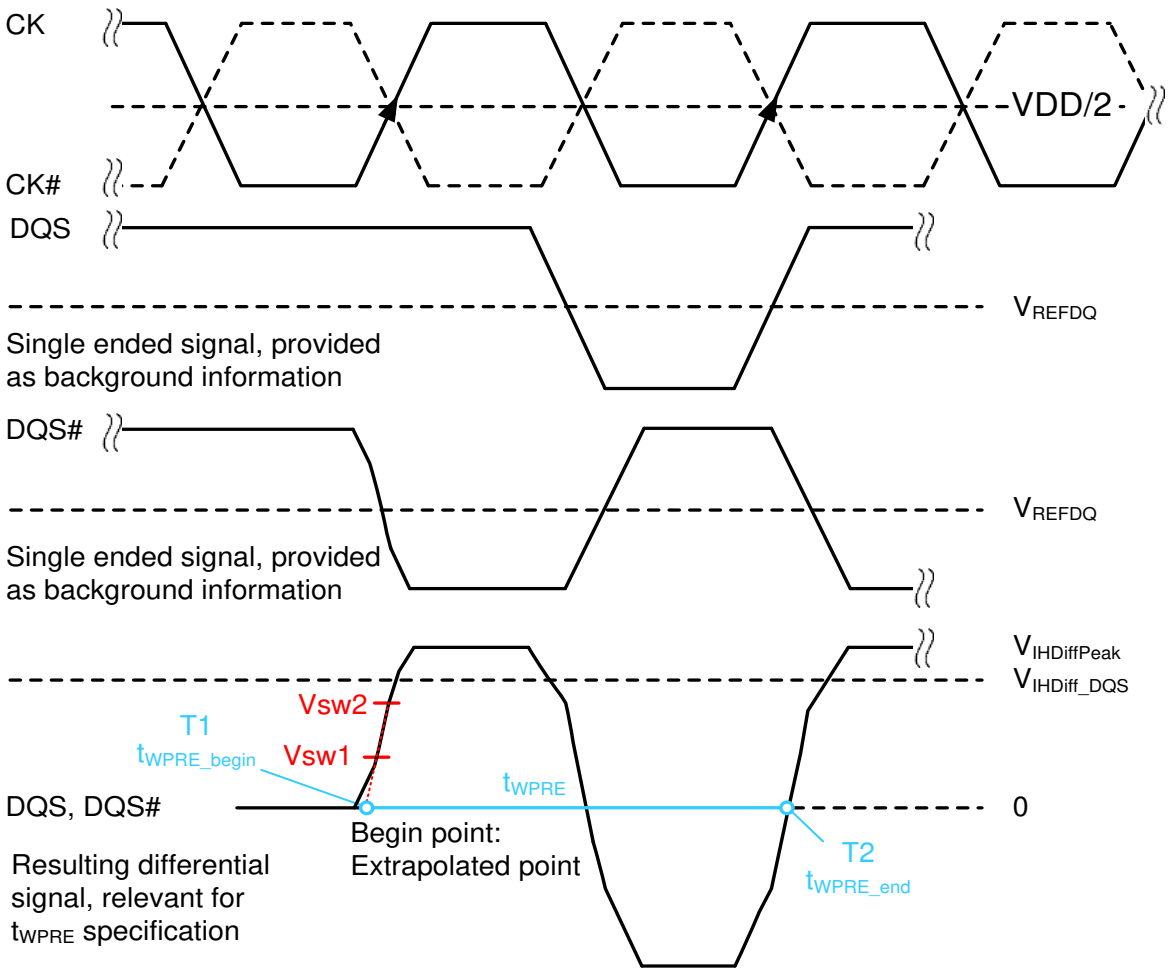

Figure 135. Method for calculating t_{WPRE} transitions and endpoints

Table 42. Reference Voltage for t_{WPRE} Timing Measurements

Symbol	Parameter	Vsw1	Vsw2	Unit
t_{WPRE}	DQS, DQS# differential Write Preamble	V_{IHDiff_DQS} x 0.1	V_{IHDiff_DQS} x 0.9	V

The method for calculating differential pulse widths for t_{WPRE2} is same as t_{WPRE}.

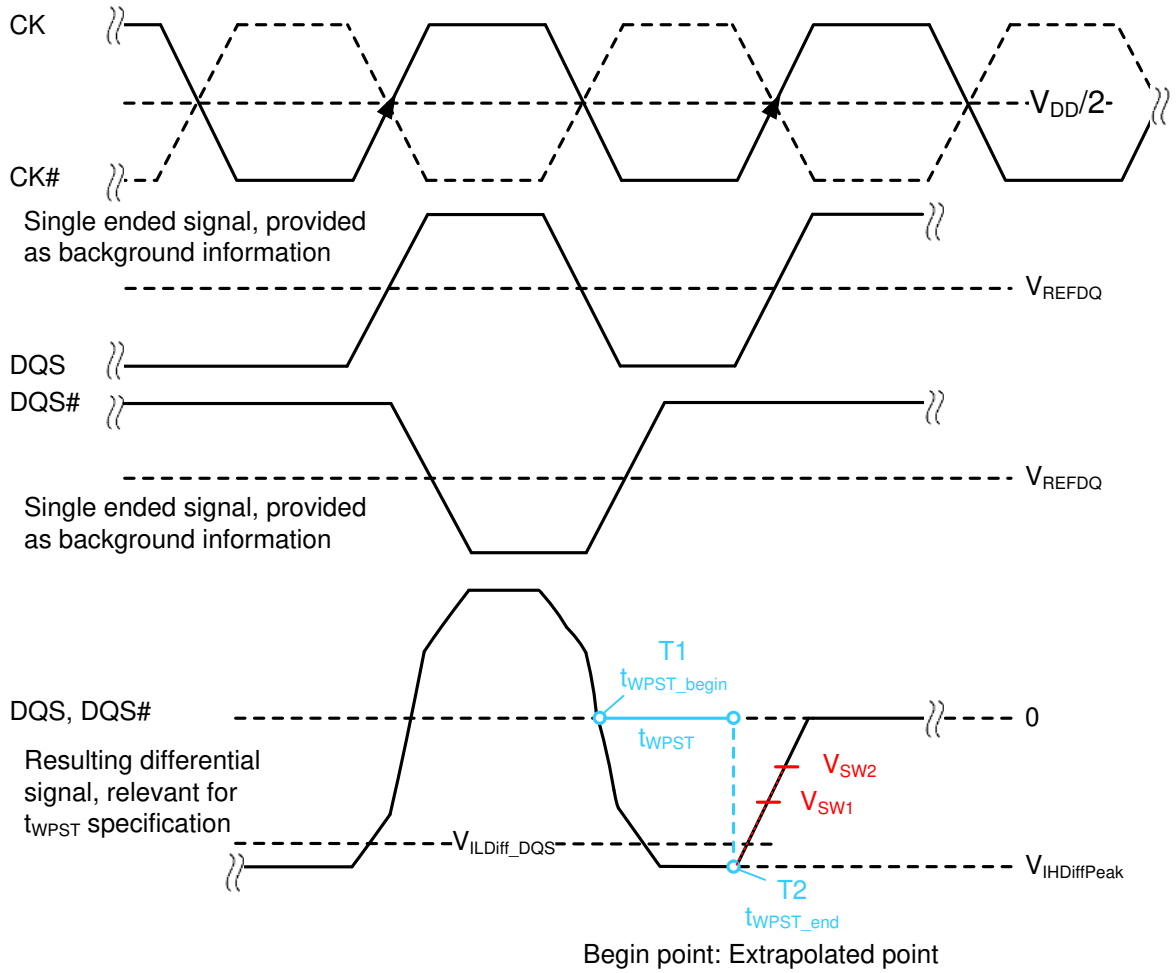

Figure 136. Method for calculating t_{WPST} transitions and endpoints

Table 43. Reference Voltage for t_{WPST} Timing Measurements

Symbol	Parameter	Vsw1	Vsw2	Unit
t_{WPST}	DQS, DQS# differential Write Postamble	V_{IHDiff_DQS} x 0.9	V_{IHDiff_DQS} x 0.1	V

Write Burst Operation

The following write timing diagram is to help understanding of each write parameter's meaning and just examples. The details of the definition of each parameter will be defined separately.

In these write timing diagram, CK and DQS are shown aligned and also DQS and DQ are shown center aligned for illustration purpose.

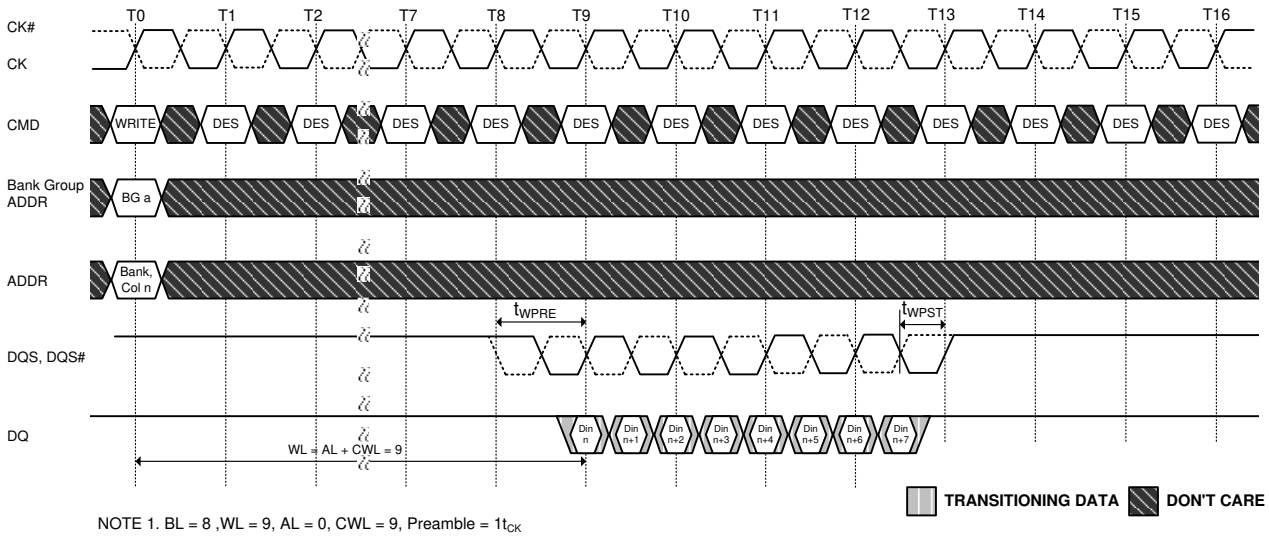

NOTE 1. BL = 8 ,WL = 9, AL = 0, CWL = 9, Preamble = $1t_{CK}$
NOTE 2. Din n = data-in to column n.
NOTE 3. DES commands are shown for ease of illustration; other commands may be valid at these times.
NOTE 4. BL8 setting activated by either MR0[A1:A0 = 0:0] or MR0[A1:A0 = 0:1] and A12 = 1 during WRITE command at T0.
NOTE 5. CA Parity = Disable, CS to CA Latency = Disable, Write DBI = Disable.

Figure 137. Write Burst Operation WL = 9 (AL = 0, CWL = 9, BL8)

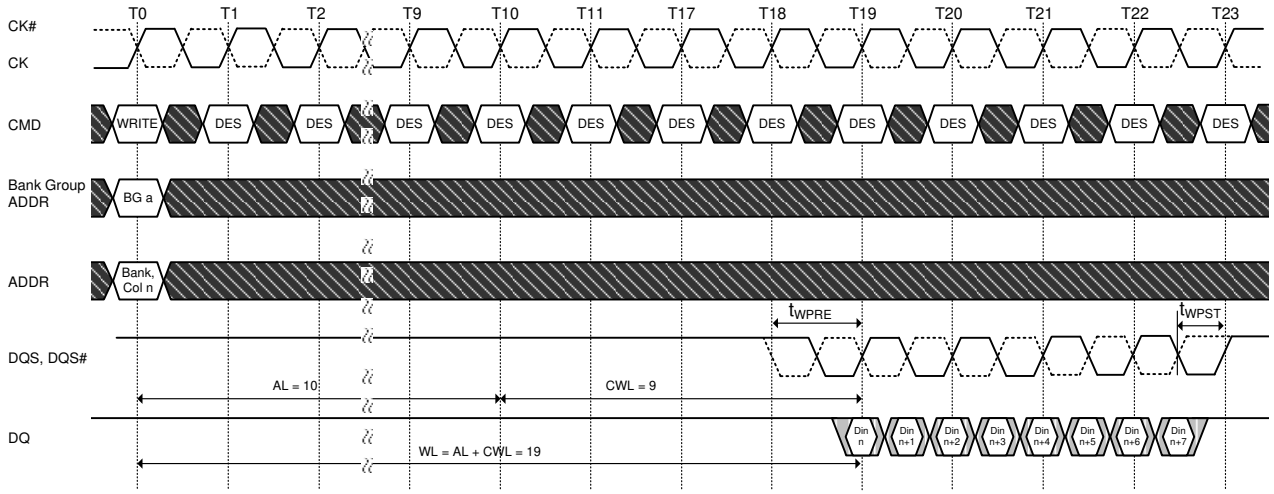

NOTE 1. BL = 8 ,WL = 19, AL = 10 (CL-1), CWL = 9, Preamble = $1t_{CK}$
NOTE 2. Din n = data-in to column n.
NOTE 3. DES commands are shown for ease of illustration; other commands may be valid at these times.
NOTE 4. BL8 setting activated by either MR0[A1:A0 = 0:0] or MR0[A1:A0 = 0:1] and A12 = 1 during WRITE command at T0.
NOTE 5. CA Parity = Disable, CS to CA Latency = Disable, Write DBI = Disable.

Figure 138. Write Burst Operation WL = 19 (AL = 10, CWL = 9, BL8)

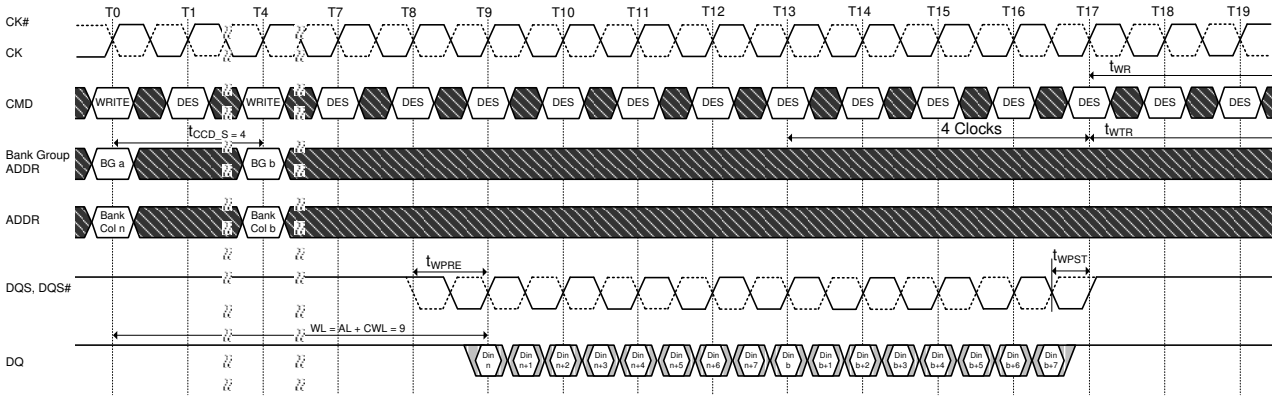

NOTE 1. BL = 8, AL = 0, CWL = 9, Preamble = $1t_{CK}$
NOTE 2. Din n (or b) = data-in to column n (or column b).
NOTE 3. DES commands are shown for ease of illustration; other commands may be valid at these times.
NOTE 4. BL8 setting activated by either MR0[A1:A0 = 0:0] or MR0[A1:A0 = 0:1] and A12 = 1 during WRITE command at T0 and T4.
NOTE 5. C/A Parity = Disable, CS to C/A Latency = Disable, Write DBI = Disable.
NOTE 6. The write recovery time (t_{WR}) and write timing parameter (t_{WTR}) are referenced from the first rising clock edge after the last write data shown at T17.

TRANSITIONING DATA DON'T CARE

Figure 139. Consecutive Write (BL8) with $1t_{CK}$ Preamble in Different Bank Group

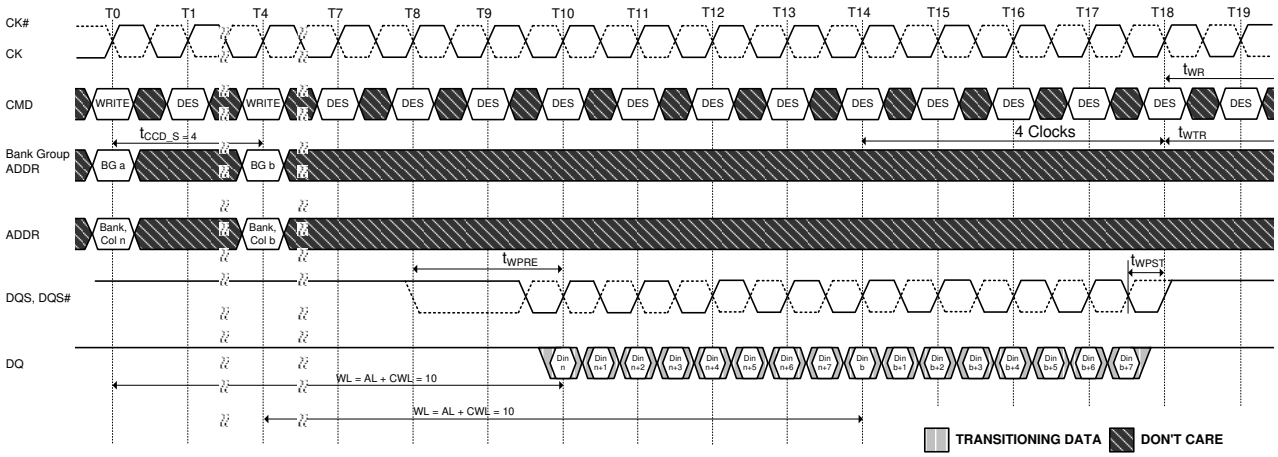

TRANSITIONING DATA DON'T CARE

NOTE 1. BL = 8 ,AL = 0, CWL = 9 + 1 = 107, Preamble = $2t_{CK}$
NOTE 2. Din n (or b) = data-in to column n(or column b).
NOTE 3. DES commands are shown for ease of illustration; other commands may be valid at these times.
NOTE 4. BL8 setting activated by either MR0[A1:A0 = 0:0] or MR0[A1:A0 = 0:1] and A12 = 1 during WRITE command at T0 and T4.
NOTE 5. CA Parity = Disable, CS to CA Latency = Disable, Write DBI = Disable.
NOTE 6. The write recovery time(t_{WR}) and write timing parameter(tWTR) are referenced from the first rising clock edge after the last write data shown at T18.
NOTE 7. When operating in 2tCK Write Preamble Mode, CWL must be programmed to a value at least 1 clock greater than the lowest CWL setting supported in the applicable t_{CK} range. That means CWL = 9 is not allowed when operating in $2t_{CK}$ Write Preamble Mode.

Figure 140. Consecutive Write (BL8) with $2t_{CK}$ Preamble in Different Bank Group

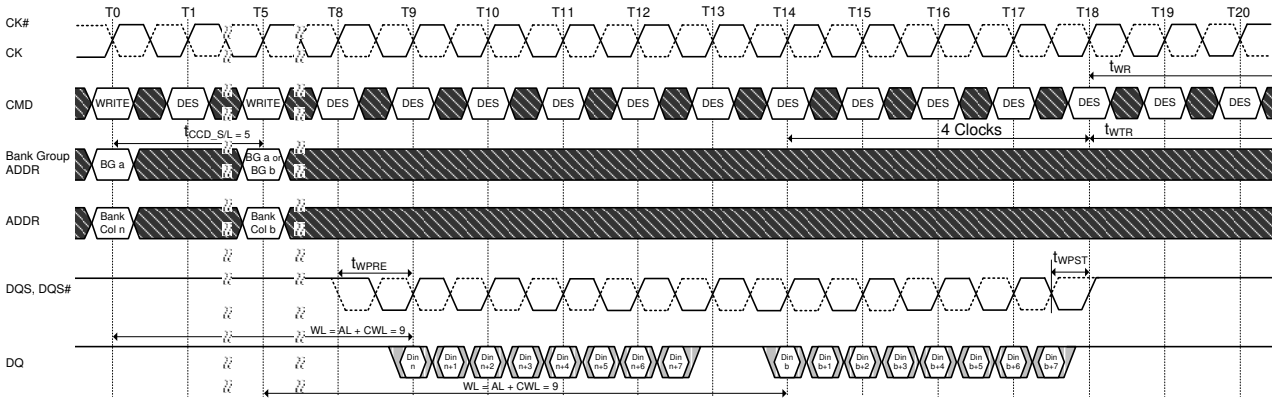

NOTE 1. BL = 8 ,AL = 0, CWL = 9 , Preamble = $1t_{CK}$, $t_{CCD_S/L}$ = 5
NOTE 2. Din n (or b) = data-in to column n(or column b).
NOTE 3. DES commands are shown for ease of illustration; other commands may be valid at these times.
NOTE 4. BL8 setting activated by either MR0[A1:A0 = 0:0] or MR0[A1:A0 = 0:1] and A12 = 1 during WRITE command at T0 and T5.
NOTE 5. CA Parity = Disable, CS to CA Latency = Disable, Write DBI = Disable.
NOTE 6. The write recovery time (t_{WR}) and write timing parameter (t_{WTR}) are referenced from the first rising clock edge after the last write data shown at T18.

Figure 141. Nonconsecutive Write (BL8) with $1t_{CK}$ Preamble in Same or Different Bank Group

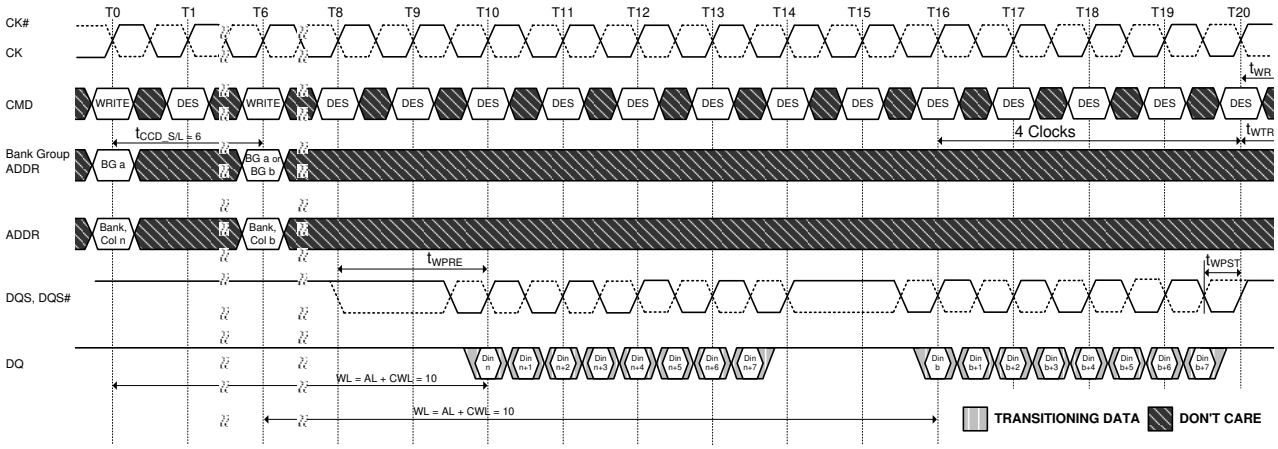

NOTE 1. BL = 8 ,AL = 0, CWL = 9 + 1 = 10^8 , Preamble = $2t_{CK}$, $t_{CCD_S/L}$ = 6
NOTE 2. Din n (or b) = data-in to column n(or column b).
NOTE 3. DES commands are shown for ease of illustration; other commands may be valid at these times.
NOTE 4. BL8 setting activated by either MR0[A1:A0 = 0:0] or MR0[A1:A0 = 0:1] and A12 = 1 during WRITE command at T0 and T6.
NOTE 5. CA Parity = Disable, CS to CA Latency = Disable, Write DBI = Disable.
NOTE 6. $t_{CCD_S/L}$=5 isn' t allowed in $2t_{CK}$ preamble mode.
NOTE 7. The write recovery time (t_{WR}) and write timing parameter (t_{WTR}) are referenced from the first rising clock edge after the last write data shown at T20.
NOTE 8. When operating in $2t_{CK}$ Write Preamble Mode, CWL must be programmed to a value at least 1 clock greater than the lowest CWL setting supported in the applicable t_{CK} range.
That means CWL = 9 is not allowed when operating in 2tCK Write Preamble Mode.

Figure 142. Nonconsecutive Write (BL8) with $2t_{CK}$ Preamble in Same or Different Bank Group

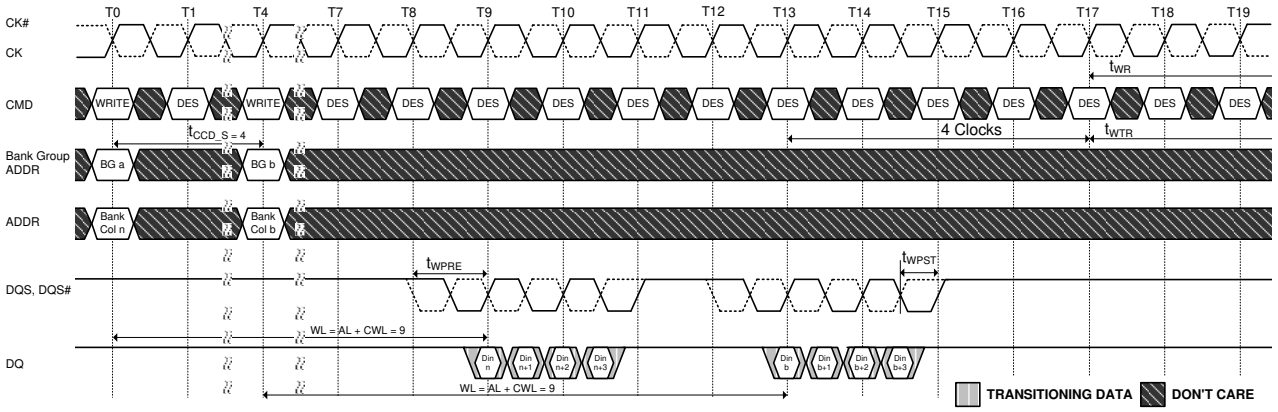

NOTE 1. BC = 4, AL = 0, CWL = 9 , Preamble = $1t_{CK}$
NOTE 2. Din n (or b) = data-in to column n (or column b).
NOTE 3. DES commands are shown for ease of illustration; other commands may be valid at these times.
NOTE 4. BC4 setting activated by MR0[A1:A0 = 0:1] and A12 = 0 during WRITE command at T0 and T4.
NOTE 5. CA Parity = Disable, CS to CA Latency = Disable, Write DBI = Disable.
NOTE 6. The write recovery time (t_{WR}) and write timing parameter (t_{WTR}) are referenced from the first rising clock edge after the last write data shown at T17.

Figure 143. Write (BC4) OTF to Write (BC4) OTF with $1t_{CK}$ Preamble in Different Bank Group

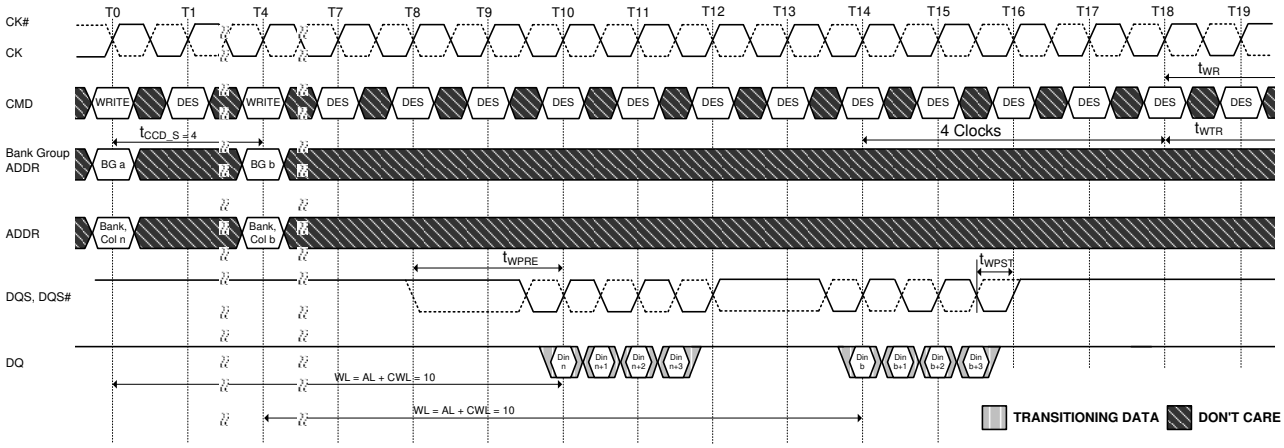

NOTE 1. BC = 4, AL = 0, CWL = 9 + 1 = 10^7 , Preamble = $2t_{CK}$
NOTE 2. Din n (or b) = data-in to column n (or column b).
NOTE 3. DES commands are shown for ease of illustration; other commands may be valid at these times.
NOTE 4. BC4 setting activated by MR0[A1:A0 = 0:1] and A12 = 0 during WRITE command at T0 and T4.
NOTE 5. CA Parity = Disable, CS to CA Latency = Disable, Write DBI = Disable.
NOTE 6. The write recovery time (t_{WR}) and write timing parameter (t_{WTR}) are referenced from the first rising clock edge after the last write data shown at T18.
NOTE 7. When operating in $2t_{CK}$ Write Preamble Mode, CWL must be programmed to a value at least 1 clock greater than the lowest CWL setting supported in the applicable t_{CK} range. That means CWL = 9 is not allowed when operating in $2t_{CK}$ Write Preamble Mode.

Figure 144. Write (BC4) OTF to Write (BC4) OTF with $2t_{CK}$ Preamble in Different Bank Group

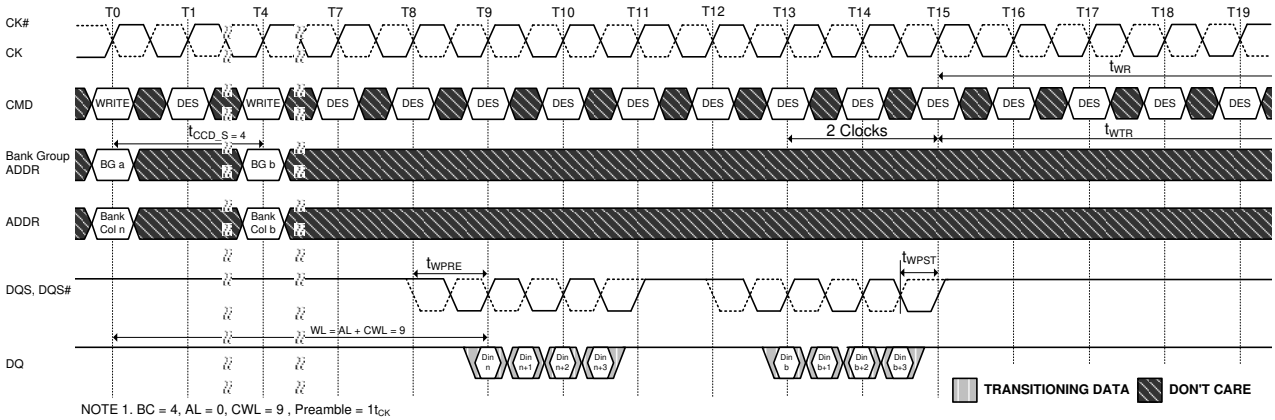

NOTE 1. BC = 4, AL = 0, CWL = 9 , Preamble = $1t_{CK}$
NOTE 2. Din n (or b) = data-in to column n (or column b).
NOTE 3. DES commands are shown for ease of illustration; other commands may be valid at these times.
NOTE 4. BC4 setting activated by MR0[A1:A0 = 1:0].
NOTE 5. CA Parity = Disable, CS to CA Latency = Disable, Write DBI = Disable.
NOTE 6. The wRite recovery time (tWR) and write timing parameter (tWTR) are referenced from the first rising clock edge after the last write data shown at T15.

Figure 145. Write (BC4) Fixed to Write (BC4) Fixed with $1t_{CK}$ Preamble in Different Bank Group

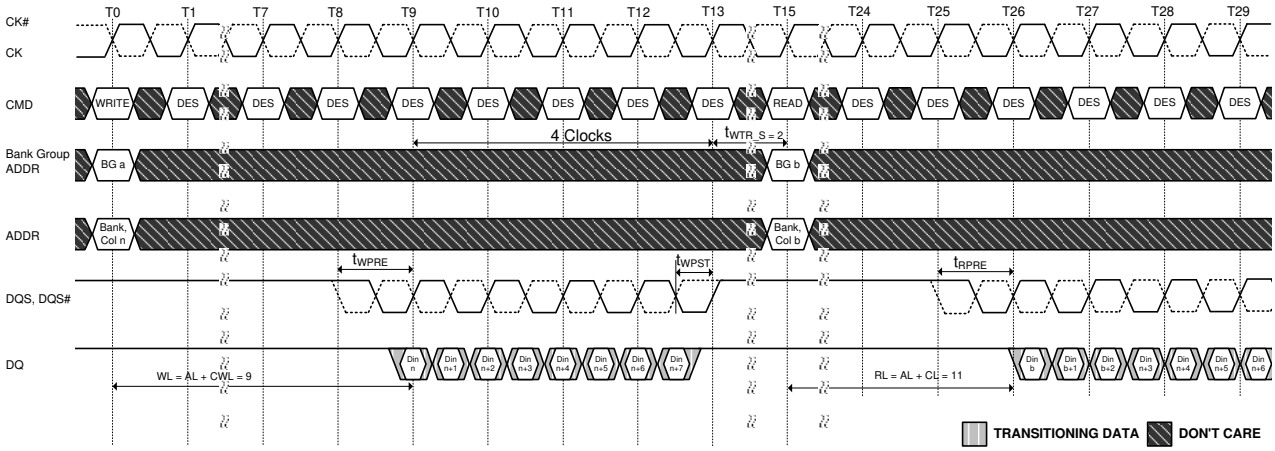

NOTE 1. BC = 4, AL = 0, CWL = 9, CL = 11, Preamble = $1t_{CK}$
NOTE 2. DIN n = data-in to column n(or column b). DOUT b = data-out from column b.
NOTE 3. DES commands are shown for ease of illustration; other commands may be valid at these times.
NOTE 4. BL8 setting activated by either MR0[A1:A0 = 0:0] or MR0[A1:A0 = 0:1] and A12 = 1 during WRITE command at T0 and READ command at T15.
NOTE 5. CA Parity = Disable, CS to CA Latency = Disable, Write DBI = Disable.
NOTE 6. The write timing parameter (t_{WTR_S}) are referenced from the first rising clock edge after the last write data shown at T13. When AL is non-zero, the external read command at T15 can be pulled in by AL.

Figure 146. Write (BL8) to Read (BL8) with $1t_{CK}$ Preamble in Different Bank Group

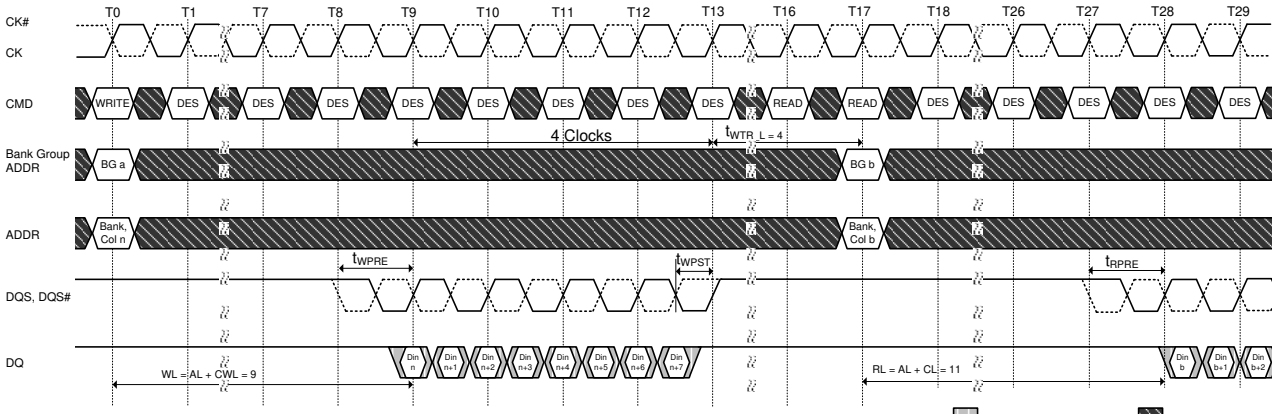

NOTE 1. BL = 8, AL = 0, CWL = 9, CL = 11, Preamble = $1t_{CK}$
NOTE 2. DIN n = data-in to column n (or column b). DOUT b = data-out from column b.
NOTE 3. DES commands are shown for ease of illustration; other commands may be valid at these times.
NOTE 4. BL8 setting activated by either MR0[A1:A0 = 0:0] or MR0[A1:A0 = 0:1] and A12 = 1 during WRITE command at T0 and READ command at T17.
NOTE 5. CA Parity = Disable, CS to CA Latency = Disable, Write DBI = Disable.
NOTE 6. The write timing parameter (t_{WTR_L}) are referenced from the first rising clock edge after the last write data shown at T13.
When AL is non-zero, the external read command at T17 can be pulled in by AL.

Figure 147. Write (BL8) to Read (BL8) with $1t_{CK}$ Preamble in Same Bank Group

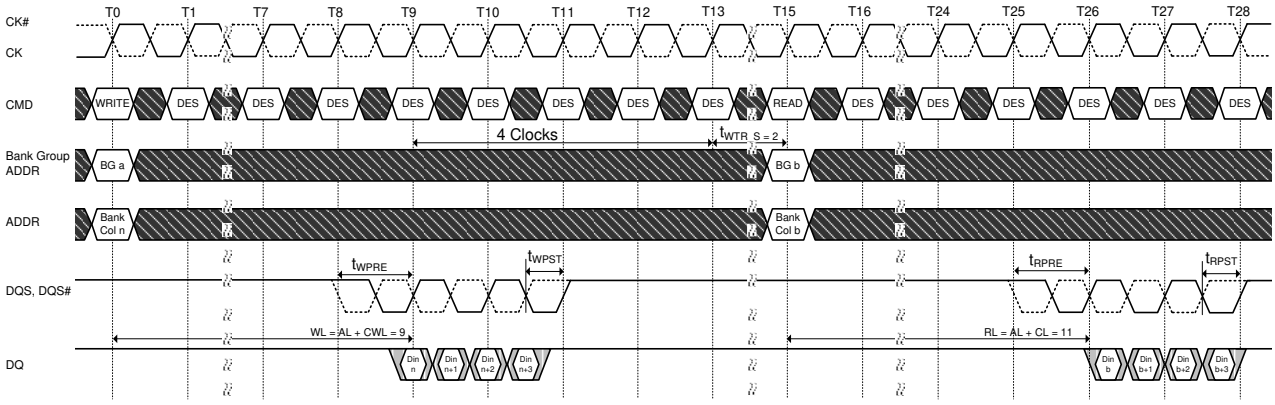

NOTE 1. BC = 4, AL = 0, CWL = 9, CL = 11, Preamble = $1t_{CK}$
NOTE 2. Din n = data-in to column n (or column b). Dout b = data-out from column b.
NOTE 3. DES commands are shown for ease of illustration; other commands may be valid at these times.
NOTE 4. BC4 setting activated by MR0[A1:A0 = 0:1] and A12 = 0 during WRITE command at T0 and READ command at T15.
NOTE 5. CA Parity = Disable, CS to CA Latency = Disable, Write DBI = Disable.
NOTE 6. The write timing parameter (t_{WTR_S}) are referenced from the first rising clock edge after the last write data shown at T13.
When AL is non-zero, the external read command at T15 can be pulled in by AL.

Figure 148. Write (BC4)OTF to Read (BC4)OTF with $1t_{CK}$ Preamble in Different Bank Group

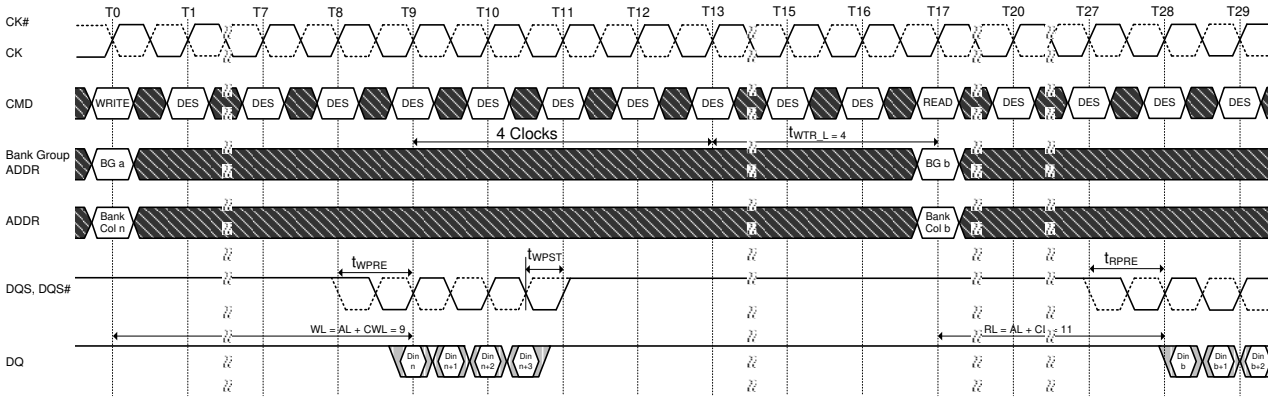

NOTE 1. BC = 4, AL = 0, CWL = 9, CL = 11, Preamble = $1t_{CK}$
NOTE 2. Din n = data-in to column n (or column b). Dout b = data-out from column b.
NOTE 3. DES commands are shown for ease of illustration; other commands may be valid at these times.
NOTE 4. BC4 setting activated by MR0[A1:A0 = 0:1] and A12 = 0 during WRITE command at T0 and READ command at T17.
NOTE 5. CA Parity = Disable, CS to CA Latency = Disable, Write DBI = Disable.
NOTE 6. The write timing parameter (t_{WTR_L}) are referenced from the first rising clock edge after the last write data shown at T13.
When AL is non-zero, the external read command at T17 can be pulled in by AL.

Figure 149. Write (BC4)OTF to Read (BC4)OTF with $1t_{CK}$ Preamble in Same Bank Group

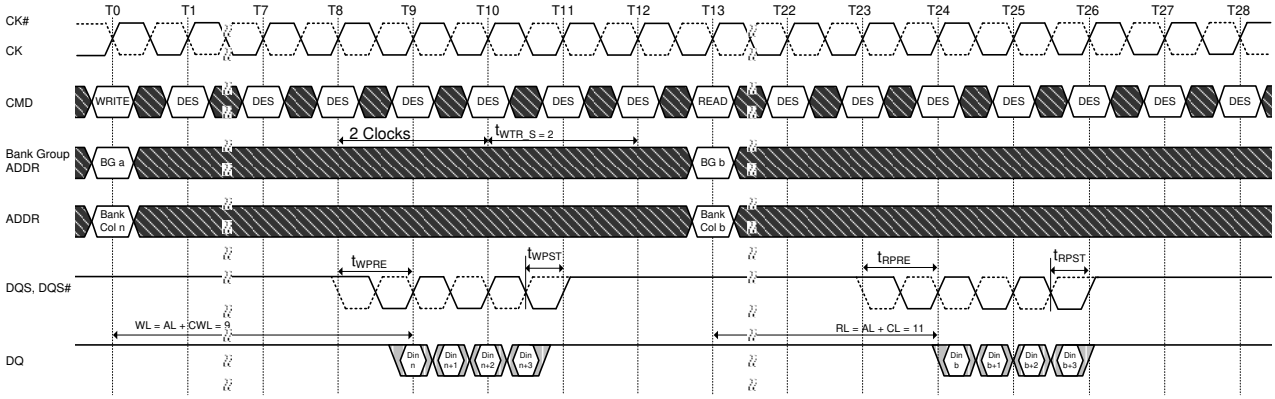

NOTE 1. BC = 4, AL = 0, CWL = 9, CL = 11, Preamble = $1t_{CK}$
NOTE 2. Din n = data-in to column n (or column b). Dout b = data-out from column b.
NOTE 3. DES commands are shown for ease of illustration; other commands may be valid at these times.
NOTE 4. BC4 setting activated by MR0[A1:A0 = 1:0].
NOTE 5. CA Parity = Disable, CS to CA Latency = Disable, Write DBI = Disable.
NOTE 6. The write timing parameter (t_{WTR_S}) are referenced from the first rising clock edge after the last write data shown at T11.
When AL is non-zero, the external read command at T13 can be pulled in by AL.

Figure 150. Write (BC4)Fixed to Read (BC4)Fixed with $1t_{CK}$ Preamble in Different Bank Group

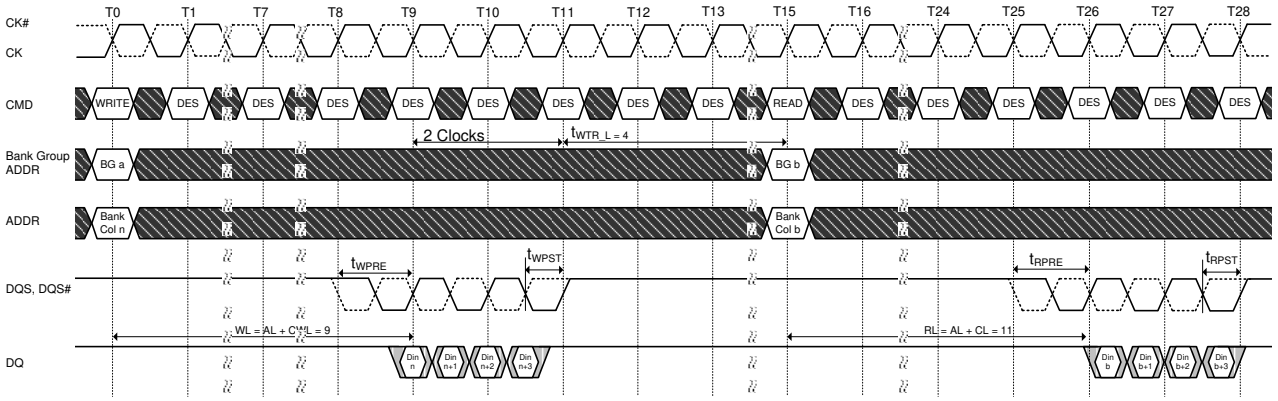

NOTE 1. BC = 4, AL = 0, CWL = 9, CL = 11, Preamble = $1t_{CK}$
NOTE 2. Din n = data-in to column n (or column b). Dout b = data-out from column b.
NOTE 3. DES commands are shown for ease of illustration; other commands may be valid at these times.
NOTE 4. BC4 setting activated by MR0[A1:A0 = 1:0].
NOTE 5. CA Parity = Disable, CS to CA Latency = Disable, Write DBI = Disable.
NOTE 6. The write timing parameter (t_{WTR_L}) are referenced from the first rising clock edge after the last write data shown at T11.
When AL is non-zero, the external read command at T15 can be pulled in by AL.

TRANSITIONING DATA DON'T CARE

Figure 151. Write (BC4)Fixed to Read (BC4)Fixed with $1t_{CK}$ Preamble in Same Bank Group

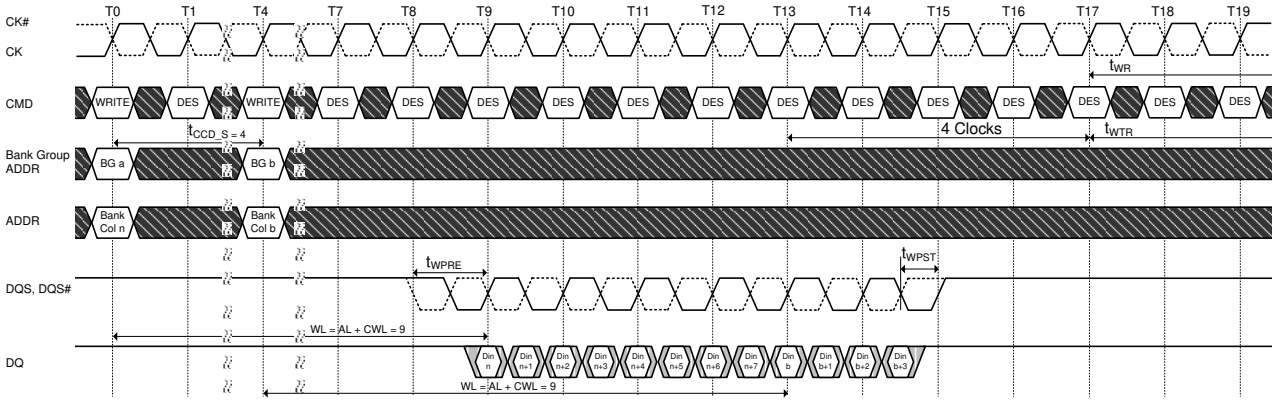

TRANSITIONING DATA DON'T CARE

NOTE 1. BL = 8 / BC = 4, AL = 0, CWL = 9, Preamble = $1t_{CK}$
NOTE 2. Din n (or b) = data-in to column n (or column b).
NOTE 3. DES commands are shown for ease of illustration; other commands may be valid at these times.
NOTE 4. BL8 setting activated by MR0[A1:A0 = 0:1] and A12 =1 during WRITE command at T0. BC4 setting activated by MR0[A1:A0 = 0:1] and A12 =0 during WRITE command at T4.
NOTE 5. CA Parity = Disable, CS to CA Latency = Disable, Write DBI = Disable.
NOTE 6. The wRite recovery time (tWR) and write timing parameter (tWTR) are referenced from the first rising clock edge after the last write Data shown at T17.

Figure 152. Write (BL8) to Write (BC4) OTF with $1t_{CK}$ Preamble in Different Bank Group

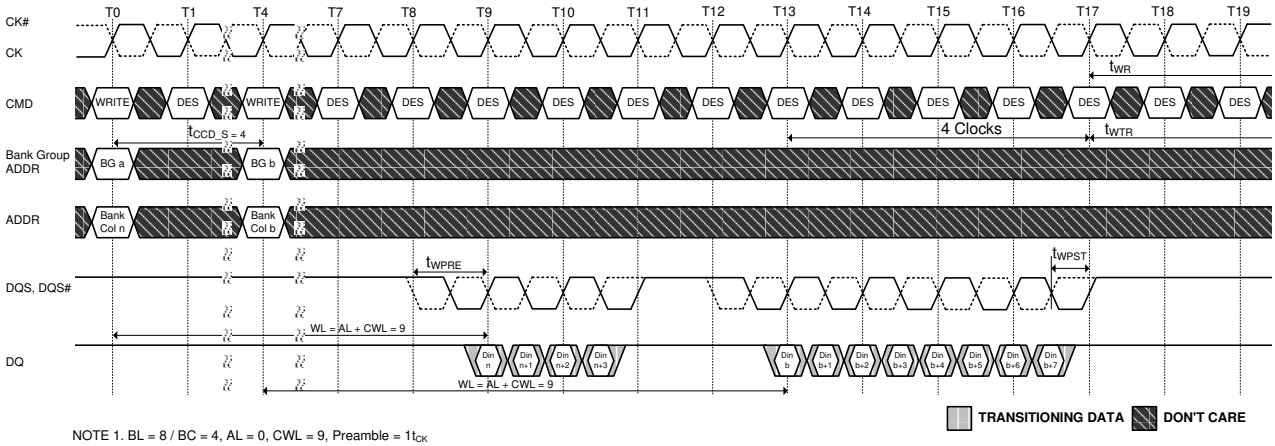

NOTE 1. BL = 8 / BC = 4, AL = 0, CWL = 9, Preamble = $1t_{CK}$
NOTE 2. Din n (or b) = data-in to column n (or column b).
NOTE 3. DES commands are shown for ease of illustration; other commands may be valid at these times.
NOTE 4. BC4 setting activated by MR0[A1:A0 = 0:1] and A12 =0 during WRITE command at T0. BL8 setting activated by MR0[A1:A0 = 0:1] and A12 =1 during WRITE command at T4.
NOTE 5. CA Parity = Disable, CS to CA Latency = Disable, Write DBI = Disable.
NOTE 6. The wRite recovery time (tWR) and write timing parameter (tWTR) are referenced from the first rising clock edge after the last write data shown at T17

Figure 153. Write (BC4)OTF to Write (BL8) with $1t_{CK}$ Preamble in Different Bank Group

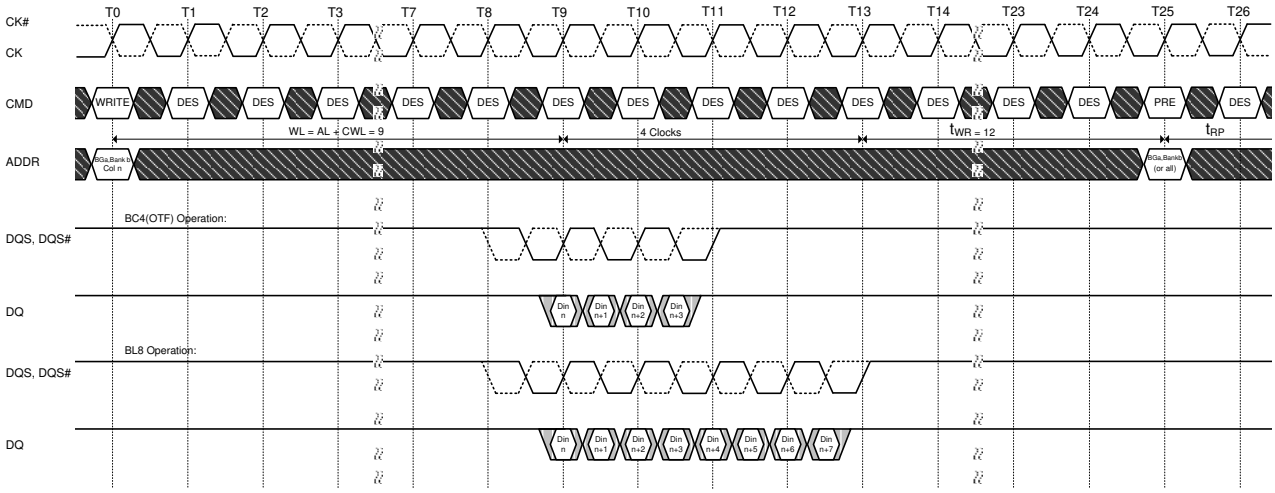

NOTE 1. BL = 8 / BC = 4, AL = 0, CWL = 9, Preamble = $1t_{CK}$, t_{WR} = 12
NOTE 2. Din n = data-in to column n.
NOTE 3. DES commands are shown for ease of illustration; other commands may be valid at these times.
NOTE 4. BC4 setting activated by MR0[A1:A0 = 0:1] and A12 =0 during WRITE command at T0. BL8 setting activated by MR0[A1:A0 = 0:0] or MR0[A1:0 = 01] and A12 =1 during WRITE command at T0.
NOTE 5. CA Parity = Disable, CS to CA Latency = Disable, Write DBI = Disable.
NOTE 6. The write recovery time (t_{WR}) is referenced from the first rising clock edge after the last write data shown at T13.
t_{WR} specifies the last burst write cycle until the precharge command can be issued to the same bank.

Figure 154. Write (BL8/BC4) OTF to Precharge Operation with $1t_{CK}$ Preamble

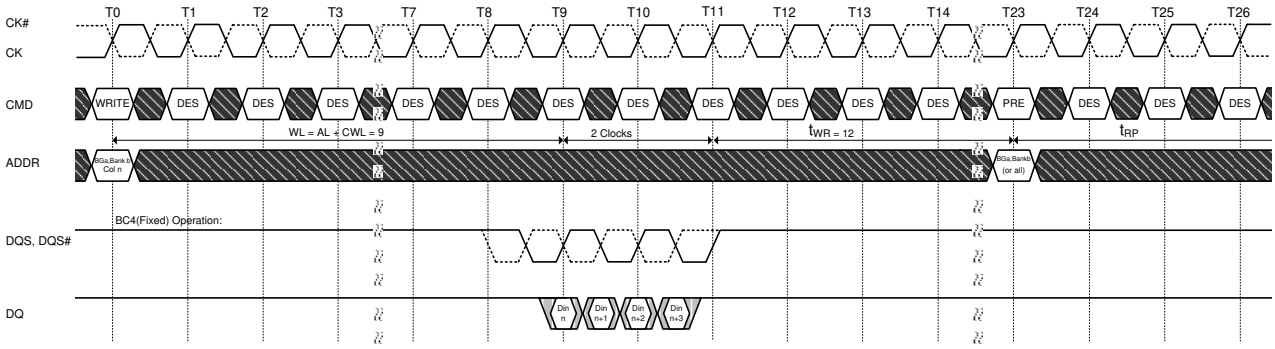

NOTE 1. BC = 4, AL = 0, CWL = 9, Preamble = $1t_{CK}$, t_{WR} = 12
NOTE 2. Din n = data-in to column n.
NOTE 3. DES commands are shown for ease of illustration; other commands may be valid at these times.
NOTE 4. BC4 setting activated by MR0[A1:A0 = 1:0].
NOTE 5. CA Parity = Disable, CS to CA Latency = Disable, Write DBI = Disable.
NOTE 6. The write recovery time (t_{WR}) is referenced from the first rising clock edge after the last write data shown at T11.
t_{WR} specifies the last burst write cycle until the precharge command can be issued to the same bank.

TRANSITIONING DATA DON'T CARE

Figure 155. Write (BC4) Fixed to Precharge Operation with $1t_{CK}$ Preamble

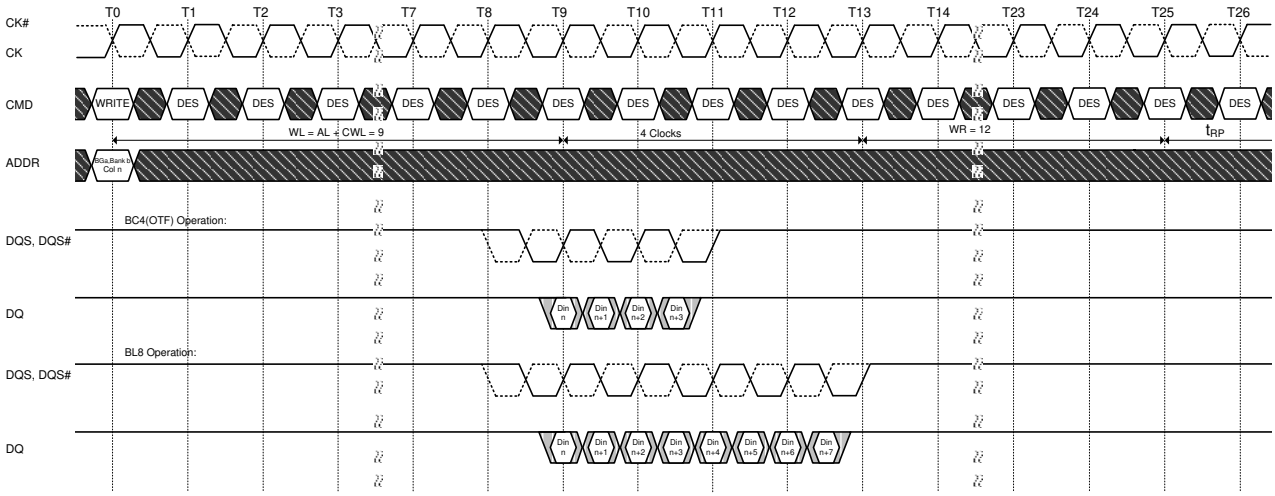

NOTE 1. BL = 8 / BC = 4, AL = 0, CWL = 9, Preamble = $1t_{CK}$, WR = 12
NOTE 2. Din n = data-in to column n.
NOTE 3. DES commands are shown for ease of illustration; other commands may be valid at these times.
NOTE 4. BC4 setting activated by MR0[A1:A0 = 0:1] and A12 =0 during WRITE command at T0.
BL8 setting activated by either MR0[A1:0 = 00] or MR0[A1:0 = 01] and A12 =1 during WRITE command at T0.
NOTE 5. CA Parity = Disable, CS to CA Latency = Disable, Write DBI = Disable.
NOTE 6. The write recovery time (WR) is referenced from the first rising clock edge after the last write data shown at T13.
WR specifies the last burst write cycle until the precharge command can be issued to the same bank.

TRANSITIONING DATA DON'T CARE

Figure 156. Write (BL8/BC4) OTF with Auto Precharge Operation and $1t_{CK}$ Preamble

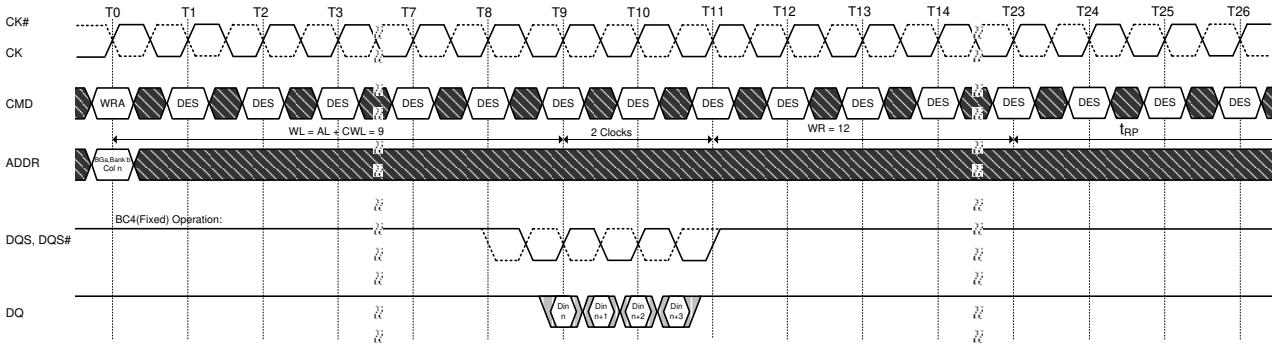

NOTE 1. BC = 4, AL = 0, CWL = 9, Preamble = $1t_{CK}$, WR = 12
NOTE 2. Din n = data-in to column n.
NOTE 3. DES commands are shown for ease of illustration; other commands may be valid at these times.
NOTE 4. BC4 setting activated by MR0[A1:A0 = 1:0].
NOTE 5. CA Parity = Disable, CS to CA Latency = Disable, Write DBI = Disable.
NOTE 6. The write recovery time (t_{WR}) is referenced from the first rising clock edge after the last write data shown at T11.
WR specifies the last burst write cycle until the precharge command can be issued to the same bank.

TRANSITIONING DATA DON'T CARE

Figure 157. Write (BC4) Fixed with Auto Precharge Operation and $1t_{CK}$ Preamble

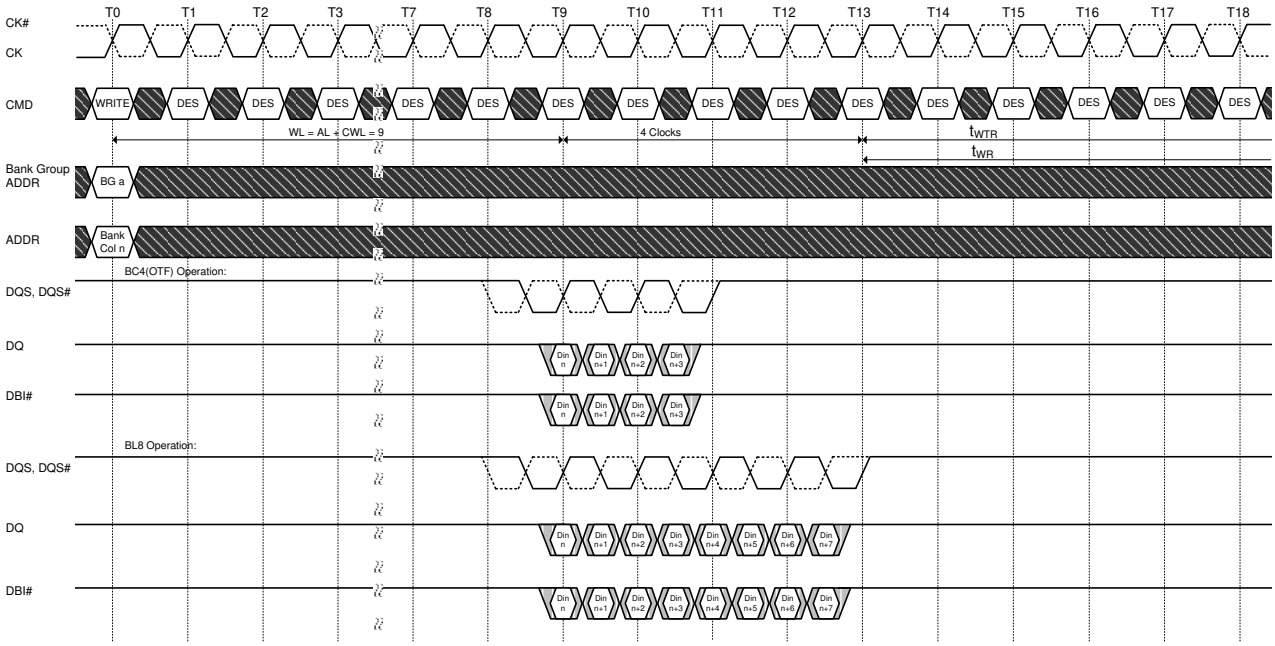

NOTE 1. BL = 8 / BC = 4, AL = 0, CWL = 9, Preamble = $1t_{CK}$
NOTE 2. Din n = data-in to column n.
NOTE 3. DES commands are shown for ease of illustration; other commands may be valid at these times.
NOTE 4. BC4 setting activated by MR0[A1:A0 = 0:1] and A12 =0 during WRITE command at T0.
BL8 setting activated by either MR0[A1:A0 = 0:0] or MR0[A1:A0 = 0:1] and A12 =1 during WRITE command at T0.
NOTE 5. CA Parity = Disable, CS to CA Latency = Disable, Write DBI = Enable, CRC = Disable.
NOTE 6. The write recovery time (t_{WR_DBI}) and write timing parameter (t_{WTR_DBI}) are referenced from the first rising clock edge after the last write data shown at T13.

TRANSITIONING DATA DON'T CARE

Figure 158. Write (BL8/BC4) OTF with $1t_{CK}$ Preamble and DBI

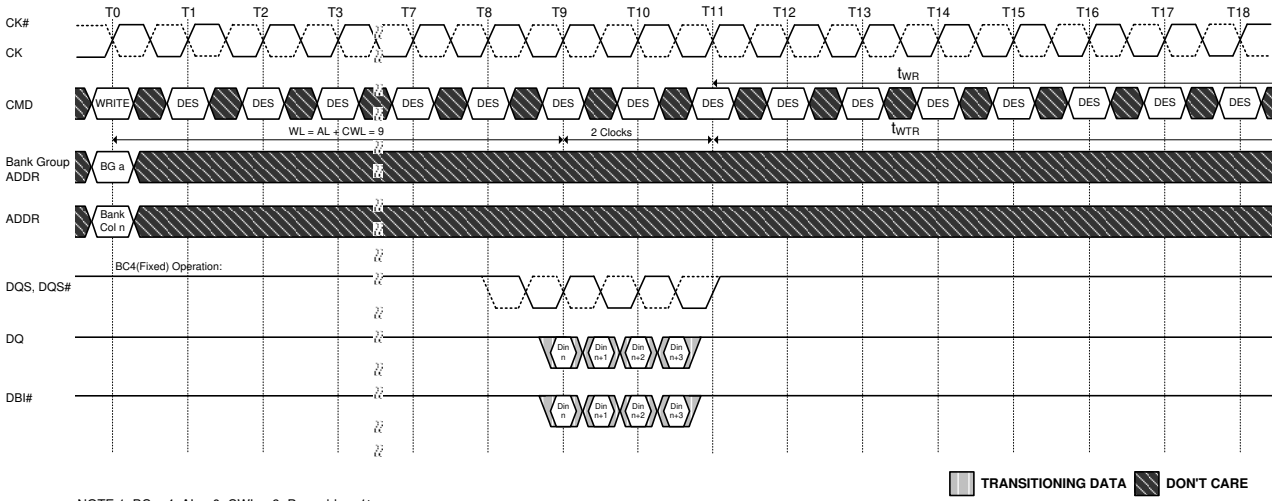

NOTE 1. BC = 4, AL = 0, CWL = 9, Preamble = $1t_{CK}$
NOTE 2. Din n = data-in to column n.
NOTE 3. DES commands are shown for ease of illustration; other commands may be valid at these times.
NOTE 4. BC4 setting activated by MR0[A1:A0 = 1:0].
NOTE 5. CA Parity = Disable, CS to CA Latency = Disable, Write DBI = Enable, CRC = Disable.
NOTE 6. The write recovery time (tWR_DBI) and write timing parameter (tWTR_DBI) are referenced from the first rising clock edge after the last write data shown at T11.

Figure 159. Write (BC4) Fixed with $1t_{CK}$ Preamble and DBI

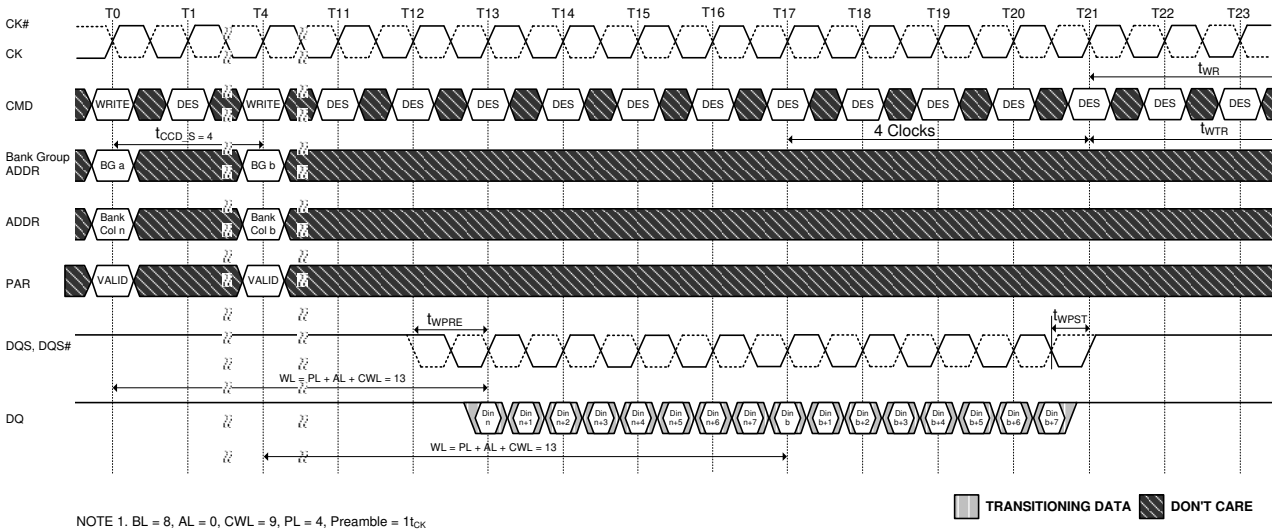

NOTE 1. BL = 8, AL = 0, CWL = 9, PL = 4, Preamble = $1t_{CK}$
NOTE 2. Din n (or b) = data-in to column n(or column b).
NOTE 3. DES commands are shown for ease of illustration; other commands may be valid at these times.
NOTE 4. BL8 setting activated by either MR0[A1:A0 = 0:0] or MR0[A1:A0 = 0:1] and A12 =1 during WRITE command at T0 and T4.
NOTE 5. CA Parity = Enable, CS to CA Latency = Disable, Write DBI = Disable.
NOTE 6. The write recovery time (t_{WR}) and write timing parameter (t_{WTR}) are referenced from the first rising clock edge after the last write data shown at T21.

Figure 160. Consecutive Write (BL8) with $1t_{CK}$ Preamble and CA Parity in Different Bank Group

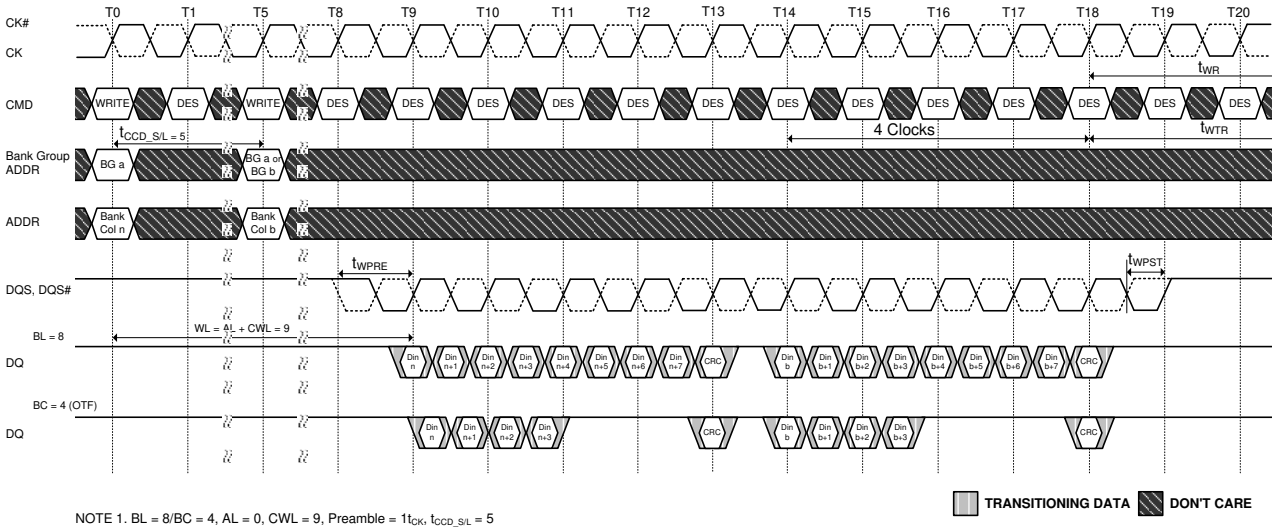

NOTE 1. BL = 8/BC = 4, AL = 0, CWL = 9, Preamble = $1t_{CK}$, $t_{CCD_S/L}$ = 5
NOTE 2. Din n (or b) = data-in to column n (or column b).
NOTE 3. DES commands are shown for ease of illustration; other commands may be valid at these times.
NOTE 4. BL8 setting activated by either MR0[A1:0 = 00] or MR0[A1:0 = 01] and A12 = 1 during WRITE command at T0 and T5.
NOTE 5. BC4 setting activated by MR0[A1:A0 = 0:1] and A12 = 0 during WRITE command at T0 and T5.
NOTE 6. C/A Parity = Disable, CS to C/A Latency = Disable, Write DBI = Disable, Write CRC = Enable.
NOTE 7. The write recovery time (t_{WR}) and write timing parameter (t_{WTR}) are referenced from the first rising clock edge after the last write data shown at T18

Figure 161. Consecutive Write (BL8/BC4) OTF with $1t_{CK}$ Preamble and Write CRC in Same or Different Bank Group

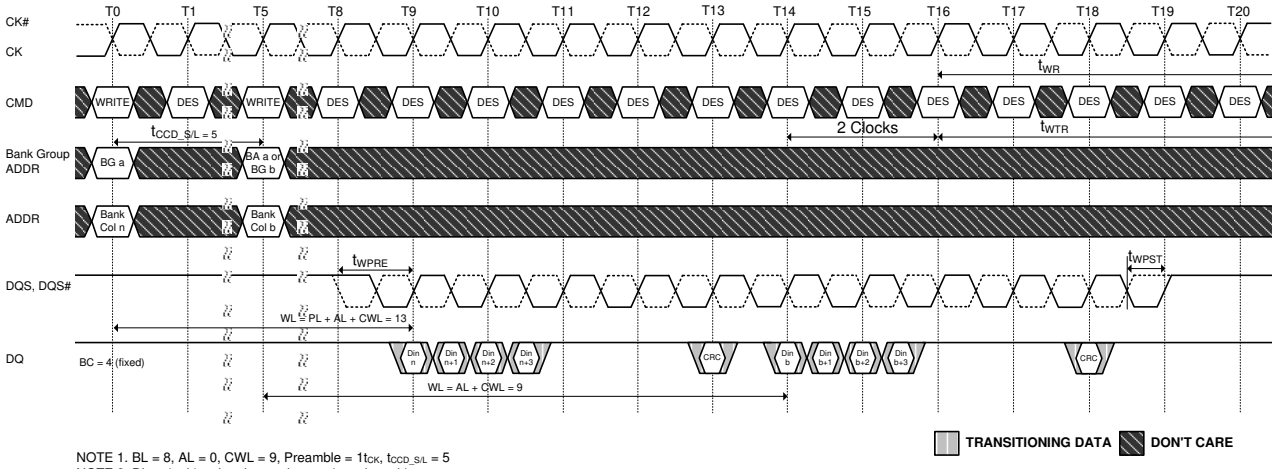

NOTE 1. BL = 8, AL = 0, CWL = 9, Preamble = $1t_{CK}$, $t_{CCD_S/L}$ = 5
NOTE 2. Din n (or b) = data-in to column n (or column b).
NOTE 3. DES commands are shown for ease of illustration; other commands may be valid at these times.
NOTE 4. BC4 setting activated by MR0[A1:A0 = 1:0] at T0 and T5.
NOTE 5. CA Parity = Disable, CS to CA Latency = Disable, Write DBI = Disable, Write CRC = Enable.
NOTE 6. The write recovery time (t_{WR}) and write timing parameter (t_{WTR}) are referenced from the first rising clock edge after the last write data shown at T16.

Figure 162. Consecutive Write (BC4) Fixed with $1t_{CK}$ Preamble and Write CRC in Same or Different Bank Group

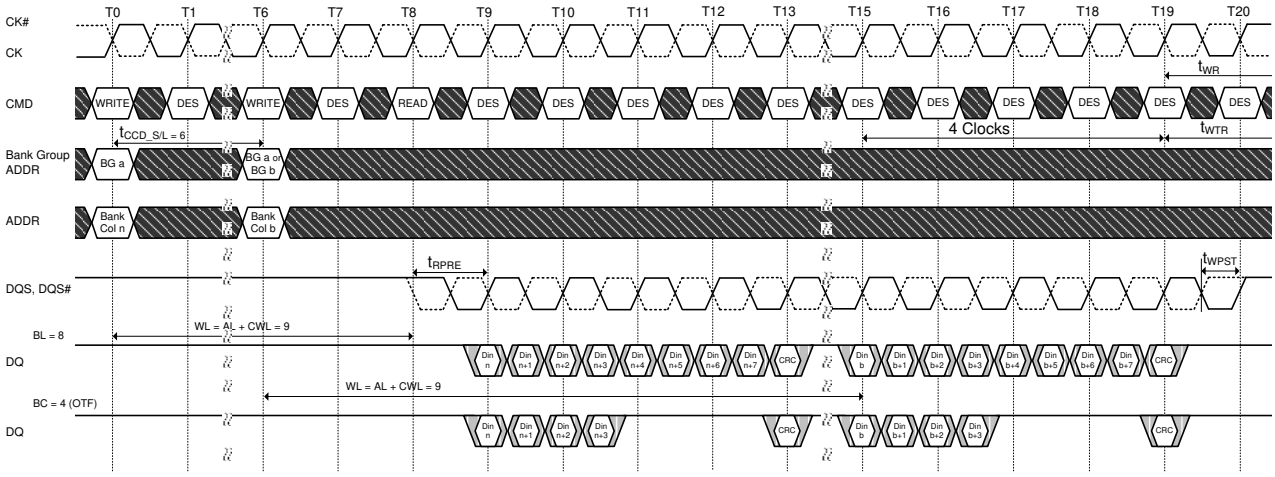

NOTE 1. BL = 8, AL = 0, CWL = 9, Preamble = $1t_{CK}$, $t_{CCD_S/L}$ = 6
NOTE 2. Din n (or b) = data-in to column n (or column b).
NOTE 3. DES commands are shown for ease of illustration; other commands may be valid at these times.
NOTE 4. BL8 setting activated by either MR0[A1A:0 = 0:0] or MR0[A1A:0 = 0:1] and A12 =1 during WRITE command at T0 and T6.
NOTE 5. BC4 setting activated by MR0[A1:A0 = 0:1] and A12 =0 during WRITE command at T0 and T6.
NOTE 6. CA Parity = Disable, CS to CA Latency = Disable, Write DBI = Disable, Write CRC = Enable.
NOTE 7. The write recovery time (t_{WR}) and write timing parameter (t_{WTR}) are referenced from the first rising clock edge after the last write data shown at T19.

TRANSITIONING DATA DON'T CARE

Figure 163. Nonconsecutive Write (BL8/BC4) OTF with $1t_{CK}$ Preamble and Write CRC in Same or Different Bank Group

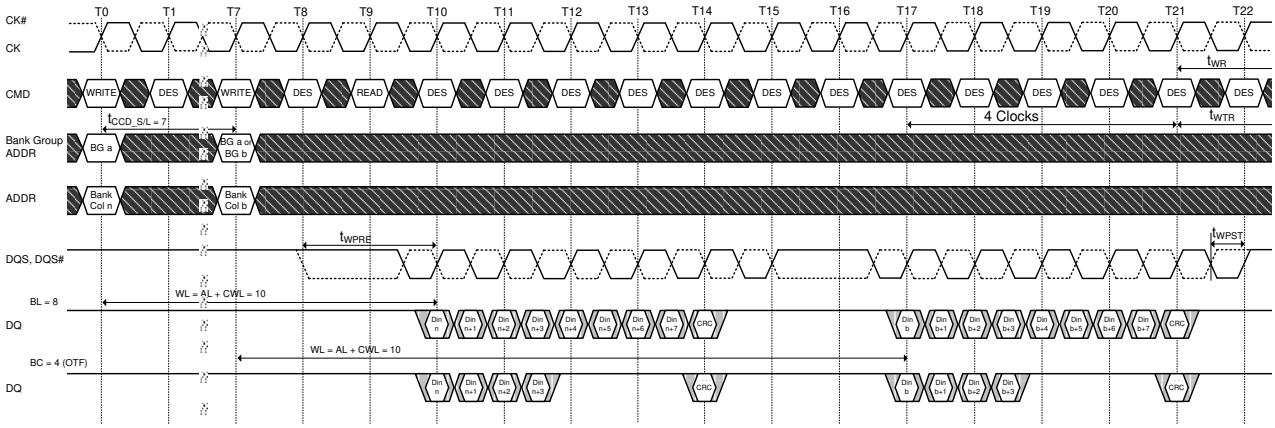

NOTE 1. BL = 8, AL = 0, CWL = 9 + 1 = 109, Preamble = $2t_{CK}$, $t_{CCD_S/L}$ = 7
NOTE 2. Din n (or b) = data-in to column n(or column b).
NOTE 3. DES commands are shown for ease of illustration; other commands may be valid at these times.
NOTE 4. BL8 setting activated by either MR0[A1:A0 = 0:0] or MR0[A1:A0 = 0:1] and A12 =1 during WRITE command at T0 and T7.
NOTE 5. BC4 setting activated by MR0[A1:A0 = 0:1] and A12 =0 during WRITE command at T0 and T7.
NOTE 6. CA Parity = Disable, CS to CA Latency = Disable, Write DBI = Disable, Write CRC = Enable.
NOTE 7. $t_{CCD_S/L}$ = 6 isn't allowed in $2t_{CK}$ preamble mode.
NOTE 8. The write recovery time (tWR) and write timing parameter (tWTR) are referenced from the first rising clock edge after the last write data shown at T21.
NOTE 9. When operating in $2t_{CK}$ Write Preamble Mode, CWL must be programmed to a value at least 1 clock greater than the lowest CWL Setting supported in the applicable t_{CK} range. That means CWL = 9 is not allowed when operating in $2t_{CK}$ Write Preamble Mode.

TRANSITIONING DATA DON'T CARE

Figure 164. Nonconsecutive Write (BL8/BC4) OTF with $2t_{CK}$ Preamble and Write CRC in Same or Different Bank Group

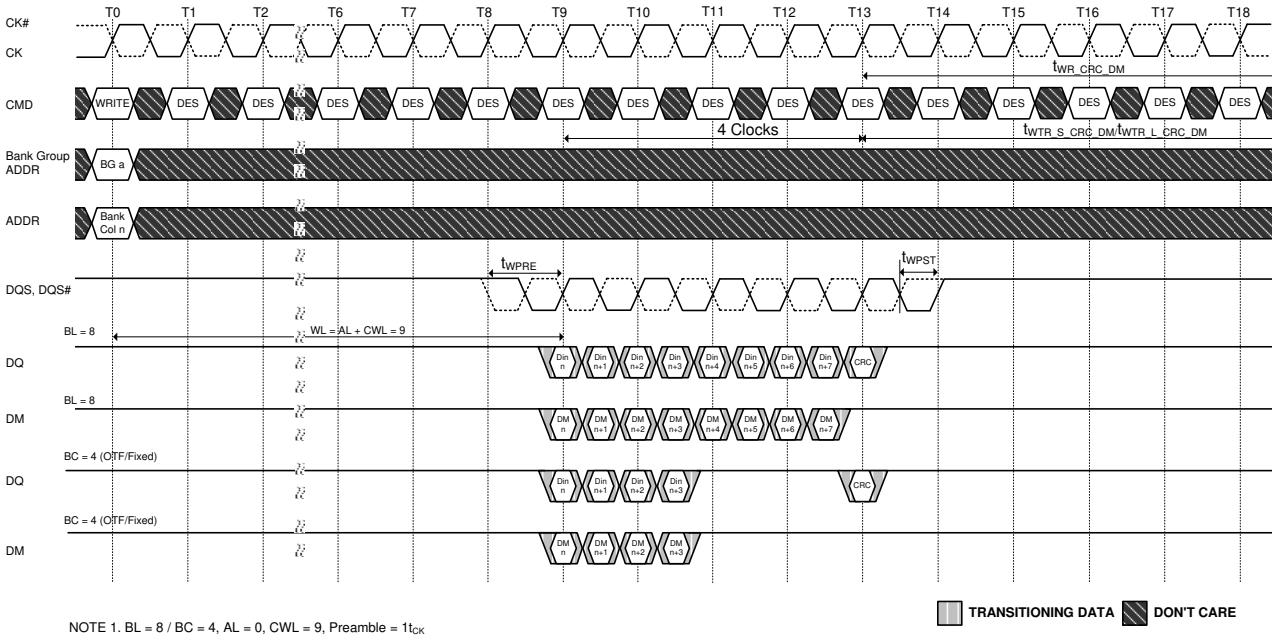

NOTE 1. BL = 8 / BC = 4, AL = 0, CWL = 9, Preamble = $1t_{CK}$
NOTE 2. Din n = data-in to column n.
NOTE 3. DES commands are shown for ease of illustration; other commands may be valid at these times.
NOTE 4. BL8 setting activated by either MR0[A1:A0 = 0:0] or MR0[A1:A0 = 0:1] and A12 = 1 during WRITE command at T0.
NOTE 5. BC4 setting activated by either MR0[A1:A0 = 1:0] or MR0[A1:A0 = 0:1] and A12 = 0 during READ command at T0.
NOTE 6. CA Parity = Disable, CS to CA Latency = Disable, Write DBI = Disable, Write CRC = Enable, DM = Enable.
NOTE 7. The write recovery time ($t_{WR_CRC_DM}$) and write timing parameter ($t_{WR_S_CRC_DM}$/$t_{WR_L_CRC_DM}$) are referenced from the first rising clock edge after the last write data shown at T13.

Figure 165. Write (BL8/BC4) OTF/Fixed with $1t_{CK}$ Preamble and Write CRC and DM in Same or Different Bank Group

Read and Write Command Interval

Table 44. Minimum Read and Write Command Timings

Bank Group	Access type	Timing Parameter	Note
Same	Minimum Read to Write	CL - CWL + RBL / 2 + 1 t_{CK} + t_{WPRE}	1,2
	Minimum Read after Write	CWL + WBL / 2 + t_{WTR_L}	1,3
Different	Minimum Read to Write	CL - CWL + RBL / 2 + 1 t_{CK} + t_{WPRE}	1,2
	Minimum Read after Write	CWL + WBL / 2 + t_{WTR_S}	1,3

Note 1. These timings require extended calibrations times t_{ZQinit} and t_{ZQCS}.
Note 2. RBL: Read burst length associated with Read command
RBL = 8 for fixed 8 and on-the-fly mode 8
RBL = 4 for fixed BC4 and on-the-fly mode BC4
Note 3. WBL: Write burst length associated with Write command
WBL = 8 for fixed 8 and on-the-fly mode 8 or BC4
WBL = 4 for fixed BC4 only

Write Timing Violations

The following write timing diagram is to help understanding of each write parameter's meaning and just examples. The details of the definition of each parameter will be defined separately.

Motivation

Generally, if Write timing parameters are violated, a complete reset/initialization procedure has to be initiated to make sure that the DRAM works properly. However, it is desirable, for certain violations as specified below, the DRAM is guaranteed to not “hang up” and that errors are limited to that particular operation.
For the following, it will be assumed that there are no timing violations with regards to the Write command itself (including ODT, etc.) and that it does satisfy all timing requirements not mentioned below.

Data Setup and Hold Offset Violations

Should the data to strobe timing requirements (t_{DQS_off}, t_{DQH_off}, $t_{DQS_dd_off}$, $t_{DQH_dd_off}$) be violated, for any of the strobe edges associated with a write burst, then wrong data might be written to the memory locations addressed with this write command.
In the example (Write Burst Operation WL = 9 (AL = 0, CWL = 9, BL8), the relevant strobe edges for write burst A are associated with the clock edges: T9, T9.5, T10, T10.5, T11, T11.5, T12, T12.5.
Subsequent reads from that location might results in unpredictable read data, however the DRAM will work properly otherwise.

Strobe and Strobe to Clock Timing Violations

Should the strobe timing requirements (t_{DQSH}, t_{DQSL}, t_{WPRE}, t_{WPST}) or the strobe to clock timing requirements (t_{DSS}, t_{DSH}, t_{DQSS}) be violated for any of the strobe edges associated with a Write burst, then wrong data might be written to the memory location addressed with the offending Write command. Subsequent reads from that location might result in unpredictable read data, however the DRAM will work properly otherwise with the following constraints:

1) Both Write CRC and data burst OTF are disabled; timing specifications other than t_{DQSH}, t_{DQSL}, t_{WPRE}, t_{WPST}, t_{DSS}, t_{DSH}, t_{DQSS} are not violated.
2) The offending write strobe (and preamble) arrive no earlier or later than six DQS transition edges from the Write-Latency position.
3) A Read command following an offending Write command from any open bank is allowed.
4) One or more subsequent WR or a subsequent WRA {to same bank as offending WR} may be issued t_{CCD_L} later but incorrect data could be written; subsequent WR and WRA can be either offending or non-offending writes. Reads from these Writes may provide incorrect data.
5) One or more subsequent WR or a subsequent WRA {to a different bank group} may be issued t_{CCD_S} later but incorrect data could be written; subsequent WR and WRA can be either offending or non-offending writes. Reads from these Writes may provide incorrect data.
6) Once one or more precharge commands(PRE or PREA) are issued to DDR4 after offending write command and all banks become precharged state(idle state), a subsequent, non-offending WR or WRA to any open bank shall be able to write correct data.

CRC Polynomial and logic equation

The CRC polynomial used by DDR4 is the ATM-8 HEC, X^8+X^2+X^1+1.

A combinatorial logic block implementation of this 8-bit CRC for 72-bits of data contains 272 two-input XOR gates contained in eight 6 XOR gate deep trees.

The CRC polynomial and combinatorial logic used by DDR4 is the same as used on GDDR5.

The error coverage from the DDR4 polynomial used is shown in the following table.

Table 45. CRC Error Detection Coverage

Error Type	Detection Capability
Random Single Bit Error	100%
Random Double Bit Error	100%
Random Odd Count Error	100%
Random one Multi-bit UI vertical column error detection excluding DBI bits	100%

CRC Combinatorial Logic Equations

```
module CRC8_D72;
// polynomial: (0 1 2 8)
// data width: 72
// convention: the first serial data bit is D[71]
//initial condition all 0 implied
// "^" = XOR
function [7:0]
nextCRC8_D72;
input [71:0] Data;
input [71:0] D;
reg [7:0] CRC;
begin
D = Data;

NewCRC[0] =
D[69] ^ D[68] ^ D[67] ^ D[66] ^ D[64] ^ D[63] ^ D[60] ^
D[56] ^ D[54] ^ D[53] ^ D[52] ^ D[50] ^ D[49] ^ D[48] ^
D[45] ^ D[43] ^ D[40] ^ D[39] ^ D[35] ^ D[34] ^ D[31] ^
D[30] ^ D[28] ^ D[23] ^ D[21] ^ D[19] ^ D[18] ^ D[16] ^
D[14] ^ D[12] ^ D[8] ^ D[7] ^ D[6] ^ D[0] ;

NewCRC[1] =
D[70] ^ D[66] ^ D[65] ^ D[63] ^ D[61] ^ D[60] ^ D[57] ^
D[56] ^ D[55] ^ D[52] ^ D[51] ^ D[48] ^ D[46] ^ D[45] ^
D[44] ^ D[43] ^ D[41] ^ D[39] ^ D[36] ^ D[34] ^ D[32] ^
D[30] ^ D[29] ^ D[28] ^ D[24] ^ D[23] ^ D[22] ^ D[21] ^
D[20] ^ D[18] ^ D[17] ^ D[16] ^ D[15] ^ D[14] ^ D[13] ^
D[12] ^ D[9] ^ D[6] ^ D[1] ^ D[0];

NewCRC[2] =
D[71] ^ D[69] ^ D[68] ^ D[63] ^ D[62] ^ D[61] ^ D[60] ^
D[58] ^ D[57] ^ D[54] ^ D[50] ^ D[48] ^ D[47] ^ D[46] ^
D[44] ^ D[43] ^ D[42] ^ D[39] ^ D[37] ^ D[34] ^ D[33] ^
D[29] ^ D[28] ^ D[25] ^ D[24] ^ D[22] ^ D[17] ^ D[15] ^
D[13] ^ D[12] ^ D[10] ^ D[8] ^ D[6] ^ D[2] ^ D[1] ^ D[0];

NewCRC[3] =
D[70] ^ D[69] ^ D[64] ^ D[63] ^ D[62] ^ D[61] ^ D[59] ^
D[58] ^ D[55] ^ D[51] ^ D[49] ^ D[48] ^ D[47] ^ D[45] ^
D[44] ^ D[43] ^ D[40] ^ D[38] ^ D[35] ^ D[34] ^ D[30] ^
D[29] ^ D[26] ^ D[25] ^ D[23] ^ D[18] ^ D[16] ^ D[14] ^
D[13] ^ D[11] ^ D[9] ^ D[7] ^ D[3] ^ D[2] ^ D[1];

NewCRC[4] =
D[71] ^ D[70] ^ D[65] ^ D[64] ^ D[63] ^ D[62] ^ D[60] ^
D[59] ^ D[56] ^ D[52] ^ D[50] ^ D[49] ^ D[48] ^ D[46] ^
D[45] ^ D[44] ^ D[41] ^ D[39] ^ D[36] ^ D[35] ^ D[31] ^
D[30] ^ D[27] ^ D[26] ^ D[24] ^ D[19] ^ D[17] ^ D[15] ^
D[14] ^ D[12] ^ D[10] ^ D[8] ^ D[4] ^ D[3] ^ D[2];

NewCRC[5] =
D[71] ^ D[66] ^ D[65] ^ D[64] ^ D[63] ^ D[61] ^ D[60] ^
D[57] ^ D[53] ^ D[51] ^ D[50] ^ D[49] ^ D[47] ^ D[46] ^
D[45] ^ D[42] ^ D[40] ^ D[37] ^ D[36] ^ D[32] ^ D[31] ^
D[28] ^ D[27] ^ D[25] ^ D[20] ^ D[18] ^ D[16] ^ D[15] ^
D[13] ^ D[11] ^ D[9] ^ D[5] ^ D[4] ^ D[3];

NewCRC[6] =
D[67] ^ D[66] ^ D[65] ^ D[64] ^ D[62] ^ D[61] ^ D[58] ^
D[54] ^ D[52] ^ D[51] ^ D[50] ^ D[48] ^ D[47] ^ D[46] ^
D[43] ^ D[41] ^ D[38] ^ D[37] ^ D[33] ^ D[32] ^ D[29] ^
D[28] ^ D[26] ^ D[21] ^ D[19] ^ D[17] ^ D[16] ^ D[14] ^
D[12] ^ D[10] ^ D[6] ^ D[5] ^ D[4];

NewCRC[7] =
D[68] ^ D[67] ^ D[66] ^ D[65] ^ D[63] ^ D[62] ^ D[59] ^
D[55] ^ D[53] ^ D[52] ^ D[51] ^ D[49] ^ D[48] ^ D[47] ^
D[44] ^ D[42] ^ D[39] ^ D[38] ^ D[34] ^ D[33] ^ D[30] ^
D[29] ^ D[27] ^ D[22] ^ D[20] ^ D[18] ^ D[17] ^ D[15] ^
D[13] ^ D[11] ^ D[7] ^ D[6] ^ D[5];

nextCRC8_D72 = NewCRC;
```

Write CRC for x4, x8 and x16 devices

The Controller generates the CRC checksum and forms the write data frames as below tables.

For a x8 DRAM the controller must send 1's in the transfer 9 if CRC is enabled and must send 1's in transfer 8 and transfer 9 of the DBI# lane if DBI function is enabled.

For a x16 DRAM the controller must send 1's in the transfer 9 if CRC is enabled and must send 1's in transfer 8 and transfer 9 of the LDBI# and UDBI# lanes if DBI function is enabled.

The DRAM checks for an error in a received code word D[71:0] by comparing the received checksum against the computed checksum and reports errors using the ALERT# signal if there is a mis-match.

A x8 device has a CRC tree with 72 input bits. The upper 8 bits are used if either Write DBI or DM is enabled. Note that Write DBI and DM function cannot be enabled simultaneously. If both Write DBI and DM is disabled then the inputs of the upper 8 bits D[71:64] are '1's.

A x16 device has two identical CRC trees with 72 input bits each. The upper 8 bits are used if either Write DBI or DM is enabled. Note that Write DBI and DM function cannot be enabled simultaneously. If both Write DBI and DM is disabled then the inputs of the upper 8 bits [D(143:136) and D(71:64)] are '1's.

A x4 device has a CRC tree with 32 input bits. The input for the upper 40 bits D[71:32] are '1's.

DRAM can write data to the DRAM core without waiting for CRC check for full writes. If bad data is written to the DRAM core then controller will retry the transaction and overwrite the bad data. Controller is responsible for data coherency.

Table 46. CRC Data Mapping for x4 Devices, BL8

Function	Transfer									
	0	1	2	3	4	5	6	7	8	9
DQ0	D0	D1	D2	D3	D4	D5	D6	D7	CRC0	CRC4
DQ1	D8	D9	D10	D11	D12	D13	D14	D15	CRC1	CRC5
DQ2	D16	D17	D18	D19	D20	D21	D22	D23	CRC2	CRC6
DQ3	D24	D25	D26	D27	D28	D29	D30	D31	CRC3	CRC7

Table 47. CRC Data Mapping for x8 Devices, BL8

Function	Transfer									
	0	1	2	3	4	5	6	7	8	9
DQ0	D0	D1	D2	D3	D4	D5	D6	D7	CRC0	1
DQ1	D8	D9	D10	D11	D12	D13	D14	D15	CRC1	1
DQ2	D16	D17	D18	D19	D20	D21	D22	D23	CRC2	1
DQ3	D24	D25	D26	D27	D28	D29	D30	D31	CRC3	1
DQ4	D32	D33	D34	D35	D36	D37	D38	D39	CRC4	1
DQ5	D40	D41	D42	D43	D44	D45	D46	D47	CRC5	1
DQ6	D48	D49	D50	D51	D52	D53	D54	D55	CRC6	1
DQ7	D56	D57	D58	D59	D60	D61	D62	D63	CRC7	1
DM#/DBI#	D64	D65	D66	D67	D68	D69	D70	D71	1	1

A x16 device is treated as two x8 devices; a x16 device will have two identical CRC trees implemented. CRC[7:0] covers data bits D[71:0], and CRC[15:8] covers data bits D[143:72].

Table 48. CRC Data Mapping for x16 Devices, BL8

Function	Transfer									
	0	1	2	3	4	5	6	7	8	9
DQ0	D0	D1	D2	D3	D4	D5	D6	D7	CRC0	1
DQ1	D8	D9	D10	D11	D12	D13	D14	D15	CRC1	1
DQ2	D16	D17	D18	D19	D20	D21	D22	D23	CRC2	1
DQ3	D24	D25	D26	D27	D28	D29	D30	D31	CRC3	1
DQ4	D32	D33	D34	D35	D36	D37	D38	D39	CRC4	1
DQ5	D40	D41	D42	D43	D44	D45	D46	D47	CRC5	1
DQ6	D48	D49	D50	D51	D52	D53	D54	D55	CRC6	1
DQ7	D56	D57	D58	D59	D60	D61	D62	D63	CRC7	1
LDM#/LDBI#	D64	D65	D66	D67	D68	D69	D70	D71	1	1
DQ8	D72	D73	D74	D75	D76	D77	D78	D79	CRC8	1
DQ9	D80	D81	D82	D83	D84	D85	D86	D87	CRC9	1
DQ10	D88	D89	D90	D91	D92	D93	D94	D95	CRC10	1
DQ11	D96	D97	D98	D99	D100	D101	D102	D103	CRC11	1
DQ12	D104	D105	D106	D107	D108	D109	D110	D111	CRC12	1
DQ13	D112	D113	D114	D115	D116	D117	D118	D119	CRC13	1
DQ14	D120	D121	D122	D123	D124	D125	D126	D127	CRC14	1
DQ15	D128	D129	D130	D131	D132	D133	D134	D135	CRC15	1
UDM#/UDBI#	D136	D137	D138	D139	D140	D141	D142	D143	1	1

CRC Error Handling

CRC Error mechanism shares the same ALERT# signal for reporting errors on writes to DRAM. The controller has no way to distinguish between CRC errors and Command/Address/Parity errors other than to read the DRAM mode registers. This is a very time consuming process in a multi-rank configuration.

To speed up recovery for CRC errors, CRC errors are only sent back as a pulse. The minimum pulse-width is six clocks. The latency to ALERT# signal is defined as t_{CRC_ALERT} in the figure below.

DRAM will set CRC Error Clear bit in A3 of MR5 to '1' and CRC Error Status bit in MPR3 of page1 to '1' upon detecting a CRC error. The CRC Error Clear bit remains set at '1' until the host clears it explicitly using an MRS command.

The controller upon seeing an error as a pulse width will retry the write transactions. The controller understands the worst case delay for ALERT# (during init) and can back up the transactions accordingly or the controller can be made more intelligent and try to correlate the write CRC error to a specific rank or a transaction. The controller is also responsible for opening any pages and ensuring that retrying of writes is done in a coherent fashion.

The pulse width may be seen longer than six clocks at the controller if there are multiple CRC errors as the ALERT# is a daisy chain bus.

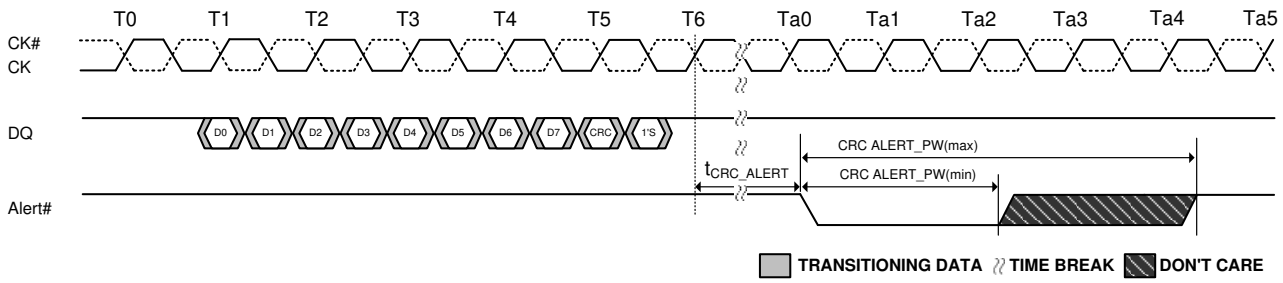

NOTE 1. CRC ALERT_PW is specified from the point Where the DRAM starts to drive the signal low to the point where the DRAM driver releases and the controller starts to pull the signal up.

Figure 166. CRC Error Reporting

Table 49. CRC Error Timing Parameters

Symbol	Parameter	Min.	Max.	Unit
t_{CRC_ALERT}	CRC error to ALERT# Latency	3	13	ns
CRC ALERT_PW	CRC ALERT_PW	6	10	t_{CK}

CRC Frame Format with BC4

DDR4 SDRAM supports CRC function for Write operation for Burst Chop 4 (BC4). The CRC function is programmable using DRAM mode register and can be enabled for writes.

When CRC is enabled the data frame length is fixed at 10UI for both BL8 and BC4 operations. DDR4 SDRAM also supports burst length on the fly with CRC enabled. This is enabled using mode register.

CRC with BC4 Data Bit Mapping

For a x4 device, the CRC tree inputs are 16 data bits, and the inputs for the remaining bits are 1.

When A2 = 1, data bits D[7:4] are used as inputs for D[3:0], D[15:12] are used as inputs to D[11:8], and so forth, for the CRC tree.

Table 50. CRC Data Mapping for x4 Devices, BC4

Function	Transfer (A2 = 0)									
	0	1	2	3	4	5	6	7	8	9
DQ0	D0	D1	D2	D3	1	1	1	1	CRC0	CRC4
DQ1	D8	D9	D10	D11	1	1	1	1	CRC1	CRC5
DQ2	D16	D17	D18	D19	1	1	1	1	CRC2	CRC6
DQ3	D24	D25	D26	D27	1	1	1	1	CRC3	CRC7
Function	**Transfer (A2 = 1)**									
	0	**1**	**2**	**3**	**4**	**5**	**6**	**7**	**8**	**9**
DQ0	D4	D5	D6	D7	1	1	1	1	CRC0	CRC4
DQ1	D12	D13	D14	D15	1	1	1	1	CRC1	CRC5
DQ2	D20	D21	D22	D23	1	1	1	1	CRC2	CRC6
DQ3	D28	D29	D30	D31	1	1	1	1	CRC3	CRC7

For a x8 device, the CRC tree inputs are 36 data bits in transfer's four through seven as 1's.

When A2 = 0, the input bits D[67:64]) are used if DBI# or DM# functions are enabled; if DBI# and DM# are disabled, then D[67:64]) are 1.

When A2 = 1, data bits D[7:4] are used as inputs for D[3:0], D[15:12] are used as inputs to D[11:8], and so forth, for the CRC tree. The input bits D[71:68]) are used if DBI# or DM# functions are enabled; if DBI# and DM# are disabled, then D[71:68]) are 1.

Table 51. CRC Data Mapping for x8 Devices, BC4

Function	Transfer (A2 = 0)									
	0	1	2	3	4	5	6	7	8	9
DQ0	D0	D1	D2	D3	1	1	1	1	CRC0	1
DQ1	D8	D9	D10	D11	1	1	1	1	CRC1	1
DQ2	D16	D17	D18	D19	1	1	1	1	CRC2	1
DQ3	D24	D25	D26	D27	1	1	1	1	CRC3	1
DQ4	D32	D33	D34	D35	1	1	1	1	CRC4	1
DQ5	D40	D41	D42	D43	1	1	1	1	CRC5	1
DQ6	D48	D49	D50	D51	1	1	1	1	CRC6	1
DQ7	D56	D57	D58	D59	1	1	1	1	CRC7	1
DM#/DBI#	D64	D65	D66	D67	1	1	1	1	1	1
Function	**Transfer (A2 = 1)**									
	0	**1**	**2**	**3**	**4**	**5**	**6**	**7**	**8**	**9**
DQ0	D4	D5	D6	D7	1	1	1	1	CRC0	1
DQ1	D12	D13	D14	D15	1	1	1	1	CRC1	1
DQ2	D20	D21	D22	D23	1	1	1	1	CRC2	1
DQ3	D28	D29	D30	D31	1	1	1	1	CRC3	1
DQ4	D36	D37	D38	D39	1	1	1	1	CRC4	1
DQ5	D44	D45	D46	D47	1	1	1	1	CRC5	1
DQ6	D52	D53	D54	D55	1	1	1	1	CRC6	1
DQ7	D60	D61	D62	D63	1	1	1	1	CRC7	1
DM#/DBI#	D68	D69	D70	D71	1	1	1	1	1	1

There are two identical CRC trees for x16 devices, each have CRC tree inputs of 36 bits.

When A2 = 0, input bits D[67:64] are used if DBI# or DM# functions are enabled; if DBI# and DM# are disabled, then D[67:64] are 1s. The input bits D[139:136] are used if DBI# or DM# functions are enabled; if DBI# and DM# are disabled, then D[139:136] are 1s.

When A2 = 1, data bits D[7:4] are used as inputs for D[3:0], D[15:12] are used as inputs for D[11:8], and so forth, for the CRC tree. Input bits D[71:68] are used if DBI# or DM# functions are enabled; if DBI# and DM# are disabled, then D[71:68] are 1s. The input bits D[143:140] are used if DBI# or DM# functions are enabled; if DBI# and DM# are disabled, then D[143:140] are 1s.

Table 52. CRC Data Mapping for x16 Devices, BC4

Function	Transfer (A2 = 0)									
	0	1	2	3	4	5	6	7	8	9
DQ0	D0	D1	D2	D3	1	1	1	1	CRC0	1
DQ1	D8	D9	D10	D11	1	1	1	1	CRC1	1
DQ2	D16	D17	D18	D19	1	1	1	1	CRC2	1
DQ3	D24	D25	D26	D27	1	1	1	1	CRC3	1
DQ4	D32	D33	D34	D35	1	1	1	1	CRC4	1
DQ5	D40	D41	D42	D43	1	1	1	1	CRC5	1
DQ6	D48	D49	D50	D51	1	1	1	1	CRC6	1
DQ7	D56	D57	D58	D59	1	1	1	1	CRC7	1
LDM#/LDBI#	D64	D65	D66	D67	1	1	1	1	1	1
DQ8	D72	D73	D74	D75	1	1	1	1	CRC8	1
DQ9	D80	D81	D82	D83	1	1	1	1	CRC9	1
DQ10	D88	D89	D90	D91	1	1	1	1	CRC10	1
DQ11	D96	D97	D98	D99	1	1	1	1	CRC11	1
DQ12	D104	D105	D106	D107	1	1	1	1	CRC12	1
DQ13	D112	D113	D114	D115	1	1	1	1	CRC13	1
DQ14	D120	D121	D122	D123	1	1	1	1	CRC14	1
DQ15	D128	D129	D130	D131	1	1	1	1	CRC15	1
UDM#/UDBI#	D136	D137	D138	D139	1	1	1	1	1	1
Function	**Transfer (A2 = 1)**									
	0	**1**	**2**	**3**	**4**	**5**	**6**	**7**	**8**	**9**
DQ0	D4	D5	D6	D7	1	1	1	1	CRC0	1
DQ1	D12	D13	D14	D15	1	1	1	1	CRC1	1
DQ2	D20	D21	D22	D23	1	1	1	1	CRC2	1
DQ3	D28	D29	D30	D31	1	1	1	1	CRC3	1
DQ4	D36	D37	D38	D39	1	1	1	1	CRC4	1
DQ5	D44	D45	D46	D47	1	1	1	1	CRC5	1
DQ6	D52	D53	D54	D55	1	1	1	1	CRC6	1
DQ7	D60	D61	D62	D63	1	1	1	1	CRC7	1
LDM#/LDBI#	D68	D69	D70	D71	1	1	1	1	1	1
DQ8	D76	D77	D78	D79	1	1	1	1	CRC8	1
DQ9	D84	D85	D86	D87	1	1	1	1	CRC9	1
DQ10	D92	D93	D94	D95	1	1	1	1	CRC10	1
DQ11	D100	D101	D102	D103	1	1	1	1	CRC11	1
DQ12	D108	D109	D110	D111	1	1	1	1	CRC12	1
DQ13	D116	D117	D118	D119	1	1	1	1	CRC13	1
DQ14	D124	D125	D126	D127	1	1	1	1	CRC14	1
DQ15	D132	D133	D134	D135	1	1	1	1	CRC15	1
UDM#/UDBI#	D140	D141	D142	D143	1	1	1	1	1	1

Example shown below of CRC tree when X8 is used in BC4 mode, x4 and x16 have similar differences.

CRC equations for x8 device in BC4 mode with A2=0 are as follows:

CRC[0] = D[69]=1 ^ D[68]=1 ^ D[67] ^ D[66] ^ D[64] ^ D[63]=1 ^ D[60]=1 ^ D[56] ^ D[54]=1 ^ D[53]=1 ^ D[52]=1 ^ D[50] ^ D[49] ^ D[48] ^ D[45]=1 ^ D[43] ^ D[40] ^ D[39]=1 ^ D[35] ^ D[34] ^ D[31]=1^ D[30]=1 ^ D[28]=1 ^ D[23]=1 ^ D[21]=1 ^ D[19] ^ D[18] ^ D[16] ^ D[14]=1 ^ D[12]=1 ^ D[8] ^ D[7]=1 ^ D[6] =1 ^ D[0] ;

CRC[1] = D[70]=1 ^ D[66] ^ D[65] ^ D[63]=1 ^ D[61]=1 ^ D[60]=1 ^ D[57] ^D[56] ^ D[55]=1 ^ D[52]=1 ^ D[51] ^ D[48] ^ D[46]=1 ^ D[45]=1 ^ D[44]=1 ^ D[43] ^ D[41] ^ D[39]=1 ^ D[36]=1 ^ D[34] ^ D[32] ^ D[30]=1 ^ D[29]=1 ^ D[28]=1 ^ D[24] ^ D[23]=1 ^ D[22]=1 ^ D[21]=1 ^ D[20]=1 ^ D[18] ^ D[17] ^ D[16] ^ D[15]=1 ^ D[14]=1 ^ D[13]=1 ^ D[12]=1 ^ D[9] ^ D[6]=1 ^ D[1] ^ D[0];

CRC[2] = D[71]=1 ^ D[69]=1 ^ D[68]=1 ^ D[63]=1 ^ D[62]=1 ^ D[61]=1 ^ D[60]=1 ^ D[58] ^ D[57] ^ D[54]=1 ^ D[50] ^ D[48] ^ D[47]=1 ^ D[46]=1 ^ D[44]=1 ^ D[43] ^ D[42] ^ D[39]=1 ^ D[37]=1 ^ D[34] ^ D[33] ^ D[29]=1 ^ D[28]=1 ^ D[25] ^ D[24] ^ D[22]=1 ^ D[17] ^ D[15]=1 ^ D[13]=1 ^ D[12]=1 ^ D[10] ^ D[8] ^ D[6]=1 ^ D[2] ^ D[1] ^ D[0];

CRC[3] = D[70]=1 ^ D[69]=1 ^ D[64] ^ D[63]=1 ^ D[62]=1 ^ D[61]=1 ^ D[59] ^ D[58] ^ D[55]=1 ^ D[51] ^ D[49] ^ D[48] ^ D[47]=1 ^ D[45]=1 ^ D[44]=1 ^ D[43] ^ D[40] ^ D[38]=1 ^ D[35] ^ D[34] ^ D[30]=1 ^ D[29]=1 ^ D[26] ^ D[25] ^ D[23]=1 ^ D[18] ^ D[16] ^ D[14]=1 ^ D[13]=1 ^ D[11] ^ D[9] ^ D[7]=1 ^ D[3] ^ D[2] ^ D[1];

CRC[4] = D[71]=1 ^ D[70]=1 ^ D[65] ^ D[64] ^ D[63]=1 ^ D[62]=1 ^ D[60]=1 ^ D[59] ^ D[56] ^ D[52]=1 ^ D[50] ^ D[49] ^ D[48] ^ D[46]=1 ^ D[45]=1 ^ D[44]=1 ^ D[41] ^ D[39]=1 ^ D[36]=1 ^ D[35] ^ D[31]=1 ^ D[30]=1 ^ D[27] ^ D[26] ^ D[24] ^ D[19] ^ D[17] ^ D[15]=1 ^ D[14]=1 ^ D[12]=1 ^ D[10] ^ D[8] ^ D[4]=1 ^ D[3] ^ D[2];

CRC[5] = D[71]=1 ^ D[66] ^ D[65] ^ D[64] ^ D[63]=1 ^ D[61]=1 ^ D[60]=1 ^ D[57] ^ D[53]=1 ^ D[51] ^ D[50] ^ D[49] ^ D[47]=1 ^ D[46]=1 ^ D[45]=1 ^ D[42] ^ D[40] ^ D[37]=1 ^ D[36]=1 ^ D[32] ^ D[31]=1 ^ D[28]=1 ^ D[27] ^ D[25] ^ D[20]=1 ^ D[18] ^ D[16] ^ D[15]=1 ^ D[13]=1 ^ D[11] ^ D[9] ^ D[5]=1 ^ D[4]=1 ^ D[3];

CRC[6] = D[67] ^ D[66] ^ D[65] ^ D[64] ^ D[62]=1 ^ D[61]=1 ^ D[58] ^ D[54]=1 ^ D[52]=1 ^ D[51] ^ D[50] ^ D[48] ^ D[47]=1 ^ D[46]=1 ^ D[43] ^ D[41] ^ D[38]=1 ^ D[37]=1 ^ D[33] ^ D[32] ^ D[29]=1 ^ D[28]=1 ^ D[26] ^ D[21]=1 ^ D[19] ^ D[17] ^ D[16] ^ D[14]=1 ^ D[12]=1 ^ D[10] ^ D[6]=1 ^ D[5]=1 ^ D[4]=1;

CRC[7] = D[68]=1 ^ D[67] ^ D[66] ^ D[65] ^ D[63]=1 ^ D[62]=1 ^ D[59] ^ D[55]=1 ^ D[53]=1 ^ D[52]=1 ^ D[51] ^ D[49] ^ D[48] ^ D[47]=1 ^ D[44]=1 ^ D[42] ^ D[39]=1 ^ D[38]=1 ^ D[34] ^ D[33] ^ D[30]=1 ^ D[29]=1 ^ D[27] ^ D[22]=1 ^ D[20]=1 ^ D[18] ^ D[17] ^ D[15] =1^ D[13]=1 ^ D[11] ^ D[7]=1 ^ D[6]=1 ^ D[5]=1;

CRC equations for x8 device in BC4 mode with A2=1 are as follows:

CRC[0] = 1 ^ 1 ^ D[71] ^ D[70] ^ D[68] ^ 1 ^ 1 ^ D[60] ^ 1 ^ 1 ^ 1 ^ D[54] ^ D[53] ^ D[52] ^ 1 ^ D[47] ^ D[44] ^ 1 ^ D[39] ^ D[38] ^ 1^ 1 ^ 1 ^ 1 ^ 1 ^ D[23] ^ D[22] ^ D[20] ^ 1 ^ 1 ^ D[12] ^ 1 ^ 1 ^ D[4] ;

CRC[1] = 1 ^ D[70] ^ D[69] ^ 1 ^ 1 ^ 1 ^ D[61] ^ D[60] ^ 1 ^ 1 ^ D[55] ^ D[52] ^ 1 ^ 1 ^ 1 ^ D[47] ^ D[45] ^ 1 ^ 1 ^ D[38] ^ D[36] ^ 1 ^ 1 ^ 1 ^ D[28] ^ 1 ^ 1 ^ 1 ^ 1 ^ D[22] ^ D[21] ^ D[20] ^1 ^ 1 ^1 ^ 1 ^ D[13] ^ 1 ^ D[5] ^ D[4];

CRC[2] = 1 ^ 1 ^ 1 ^1 ^1 ^ 1 ^ 1 ^ D[62] ^ D[61] ^ 1 ^ D[54] ^ D[52] ^ 1 ^ 1 ^ 1 ^ D[47] ^ D[46] ^ 1 ^ 1 ^ D[38] ^ D[37] ^ 1 ^ 1 ^ D[29] ^ D[28] ^ 1 ^ D[21] ^ 1 ^ 1 ^ 1 ^ D[14] ^ D12] ^1 ^ D[6] ^ D[5] ^ D[4];

CRC[3] = 1 ^ 1 ^ D[68] ^ 1 ^ 1 ^ 1 ^ D[63] ^ D[62] ^ 1 ^ D[55] ^ D[53] ^ D[52] ^ 1 ^ 1 ^ 1 ^ D[47] ^ D[44] ^ 1 ^ D[39] ^ D[38] ^ 1 ^ 1 ^ D[30] ^ D[29] ^ 1 ^ D[22] ^ D[20] ^ 1 ^ 1 ^ D[15] ^ D[13] ^ 1 ^ D[7] ^ D[6] ^ D[5];

CRC[4] = 1 ^1 ^ D[69] ^ D[68] ^ 1 ^ 1 ^ 1 ^ D[63] ^ D[60] ^ 1 ^ D[54] ^ D[53] ^ D[52] ^ 1 ^1 ^ 1 ^ D[45] ^ 1 ^ 1 ^ D[39] ^1 ^ 1 ^ D[31] ^ D[30] ^ D[28] ^ D[23] ^ D[21] ^ 1 ^ 1 ^ 1 ^ D[14] ^ D[12] ^ 1 ^ D[7] ^ D[6];

CRC[5] = 1 ^ D[70] ^ D[69] ^ D[68] ^ 1 ^ 1 ^ 1 ^ D[61] ^ 1 ^ D[55] ^ D[54] ^ D[53] ^ 1 ^ 1 ^ 1 ^ D[46] ^ D[44] ^ 1 ^ 1 ^ D[36] ^ 1 ^ 1 ^ D[31] ^ D[29] ^ 1 ^ D[22] ^ D[20] ^ 1 ^ 1 ^ D[15] ^ D[13] ^ 1 ^ 1 ^ D[7];

CRC[6] = D[71] ^ D[70] ^ D[69] ^ D[68] ^ 1 ^ 1 ^ D[62] ^ 1 ^ 1 ^ D[55] ^ D[54] ^ D[52] ^ 1 ^1 ^ D[47] ^ D[45] ^ 1 ^ 1 ^ D[37] ^ D[36] ^1 ^ 1 ^ D[30] ^ 1 ^ D[23] ^ D[21] ^ D[20] ^ 1 ^ 1 ^ D[14] ^ 1 ^ 1 ^ 1;

CRC[7] = 1 ^ D[71] ^ D[70] ^ D[69] ^ 1 ^ 1 ^ D[63] ^ 1 ^ 1 ^ 1 ^ D[55] ^ D[53] ^ D[52] ^ 1 ^ 1 ^ D[46] ^ 1 ^ 1 ^ D[38] ^ D[37] ^ 1 ^ 1 ^ D[31] ^ 1 ^ 1 ^ D[22] ^ D[21] ^ 1^ 1 ^ D[15] ^ 1 ^ 1 ^ 1;

Simultaneous DM and CRC Functionality

When both DM and Write CRC are enabled in the DRAM mode register, the DRAM calculates CRC before sending the write data into the array. If there is a CRC error, the DRAM blocks the write operation and discards the data. For a x16, when the DRAM detects an error in CRC tree, DDR4 DRAMs may mask all DQs or half the DQs depending upon the specific vendor implementation behavior. Both implementations are valid. For the DDR4 DRAMs that masking half the DQs, DQ0 through DQ7 will be masked if the lower byte. CRC tree had the error and DQ8 through DQ15 will be masked if the upper byte CRC tree had the error.

Simultaneous MPR Write, Per DRAM Addressability and CRC Functionality

The following combination of DDR4 features are prohibited for simultaneous operation:

1) MPR Write and Write CRC (Note: MPR Write is via Address pins)
2) Per DRAM Addressability and Write CRC (Note: Only MRS are allowed during PDA and also DQ0 is used for PDA detection)

Post Package Repair (hPPR)

DDR4 supports Fail Row address repair as optional feature for 4Gb and required for 8Gb and above. Supporting hPPR is identified via datasheet and SPD in Module so should refer to DRAM manufacturer's Datasheet. PPR provides simple and easy repair method in the system and Fail Row address can be repaired by the electrical programming of Electrical-fuse scheme.

With hPPR, DDR4 can correct 1Row per Bank Group

Electrical-fuse cannot be switched back to un-fused states once it is programmed. The controller should prevent unintended hPPR mode entry and repair. (i.e. Command/Address training period)

DDR4 defines two hard fail row address repair sequences and users can choose to use among those 2 command sequences. The first command sequence uses a WRA command and ensures data retention with Refresh operations except for the 2banks containing the rows being repaired, with BA[0] a don't care. Second command sequence is to use WR command and Refresh operation can't be performed in the sequence. So, the second command sequence doesn't ensure data retention for target DRAM.

When hard PPR Mode is supported, entry into hPPR Mode is to be is protected through a sequential MRS guard key to prevent unintentional hPPR programming. When soft PPR Mode, i.e. sPPR, is supported, entry into sPPR Mode is to be protected through a sequential MRS guard key to prevent unintentional sPPR programming. The sequential MRS guard key for hPPR mode and sPPR is the same Guard Key, i.e. hPPR/sPPR Guard Key.

The hPPR/sPPR Guard Key requires a sequence of four MR0 commands to be executed immediately after entering hPPR mode (setting MR4 bit 13 to a "1") or immediately after entering sPPR mode(setting MR4 bit 5 to a "1"). The hPPR/sPPR Guard Key's sequence must be entered in the specified order as stated and shown in the spec below. Any interruption of the hPPR/sPPR Guard Key sequence from other MR commands or non-MR commands such as ACT, WR, RD, PRE, REF, ZQ, NOP, RFU is not allowed. Although interruption of the hPPR/sPPR Guard Key entry is not allowed, if the hPPR/sPPR Guard Key is not entering in the required order or is interrupted by other commands, the hPPR Mode or sPPR Mode will not execute and the offending command terminating hPPR/sPPR Mode may or may not execute correctly; however, the offending command will not cause the DRAM to "lock up". Additionally, when the hPPR or sPPR entry sequence is interrupted, subsequent ACT and WR commands will be conducted as normal DRAM commands. If a hPPR operation was prematurely terminated, the MR4 bit 13 must be re-set "0" prior to performing another hPPR or sPPR operation. If a sPPR operation was prematurely terminated, the MR4 bit 5 must be re-set to "0" prior to performing another sPPR or hPPR operation. The DRAM does not provide an error indication if an incorrect hPPR/sPPR Guard Key sequence is entered.

Table 53. hPPR and sPPR MR0 Guard Key Sequences

Guard Keys	BG1:0(1)	BA1:0	A16:A12	A11	A10	A9	A8	A7	A6:A0
1st MR0	00	00	X	1	1	0	0	1	1111111
2nd MR0	00	00	X	0	1	1	1	1	1111111
3rd MR0	00	00	X	1	0	1	1	1	1111111
4th MR0	00	00	X	0	0	1	1	1	1111111

Note 1. BG1 is 'Don't Care' in x16
Note 2. A6:A0 can be either '1111111' or 'Don't Care'. '1111111' is allowed in all DDR4 density but 'Don't Care' in A6:A0 is only allowed in 4Gb die DDR4 product.
Note 3. After completing hPPR and sPPR mode, MR0 must be re-programmed to pre-PPR mode state if the DRAM is to be accessed.

Hard Fail Row Address Repair (WRA Case)

The following is procedure of hPPR with WRA command.

1. Before entering 'hPPR' mode, All banks must be Precharged; DBI and CRC Modes must be disabled.
2. Enable hPPR using MR4 bit "A13=1" and wait t_{MOD}.
3. Issue guard Key as four consecutive MR0 commands each with a unique address field A[17:0]. Each MR0 command should space by t_{MOD}.
4. Issue ACT command with Fail Row address.
5. After t_{RCD}, Issue WRA with Valid address. DRAM will consider Valid address with WRA command as 'Don't Care'.
6. After WL (WL = CWL + AL + PL), All DQs of target DRAM should be low for $4t_{CK}$. If high is driven to All DQs of a DRAM consecutively for equal to or longer than $2t_{CK}$, then DRAM does not conduct hPPR and retains data if REF command is properly issued; if all DQs are neither low for $4t_{CK}$ nor high for equal to or longer than $2t_{CK}$, then hPPR mode execution is unknown.
7. Wait t_{PGM} to allow DRAM repair target Row Address internally and issue PRE.
8. Wait t_{PGM_Exit} after PRE which allow DRAM to recognize repaired Row address.
9. Exit hPPR with setting MR4 bit "A13=0".
10. DDR4 will accept any valid command after t_{PGMPST}.
11. In more than one fail address repair case, Repeat step 2 to 9.

In addition to that, hPPR mode allows REF commands from PL + WL + BL/2 + t_{WR} + t_{RP} after WRA command during t_{PGM} and t_{PGMPST} for proper repair; provided multiple REF commands are issued at a rate of t_{REFI} or $t_{REFI}/2$, however back-to-back REF commands must be separated by at least $t_{REFI}/4$ when the DRAM is in hPPR mode. Upon receiving REF command, DRAM performs normal Refresh operation and ensure data retention with Refresh operations except for the 2banks containing the rows being repaired, with BA[0] don't care. Other command except REF during t_{PGM} can cause incomplete repair so no other command except REF is allowed during t_{PGM} Once hPPR mode is exited, to confirm if target row is repaired correctly, host can verify by writing data into the target row and reading it back after hPPR exit with MR4 [A13=0] and t_{PGMPST}.

Hard Fail Row Address Repair (WR Case)

The following is procedure of hPPR PPR with WR command.

1. Before entering hPPR mode, all banks must be precharged; DBI and CRC modes must be disabled.
2. Enable hPPR using MR4 bit "A13=1" and wait t_{MOD}.
3. Issue guard Key as four consecutive MR0 commands each with a unique address field A [17:0]. Each MR0 command should space by t_{MOD}.
4. Issue ACT command with row address.
5. After t_{RCD}, issue WR with valid address. DRAM consider the valid address with WR command as 'Don't Care'.
6. After WL (WL = CWL + AL + PL), All DQs of target DRAM should be low for $4t_{CK}$. If high is driven to All DQs of a DRAM consecutively for equal to or longer than first $2t_{CK}$, then DRAM does not conduct hPPR and retains data if REF command is properly issued; if all DQs are neither low for $4t_{CK}$ nor high for equal to or longer than first $2t_{CK}$, then hPPR mode execution is unknown.
7. Wait t_{PGM} to allow DRAM repair target Row Address internally and issue PRE.
8. Wait t_{PGM_Exit} after PRE which allow DRAM to recognize repaired Row address.
9. Exit hPPR with setting MR4 bit "A13=0".
10. DDR4 will accept any valid command after t_{PGMPST}.
11. In more than one fail address repair case, Repeat step 2 to10.

In this sequence, Refresh command is not allowed between hPPR MRS entry and exit.

Once hPPR mode is exited, to confirm if target row is repaired correctly, host can verify by writing data into the target row and reading it back after hPPR exit with MR4 [A13=0] and t_{PGMPST}.

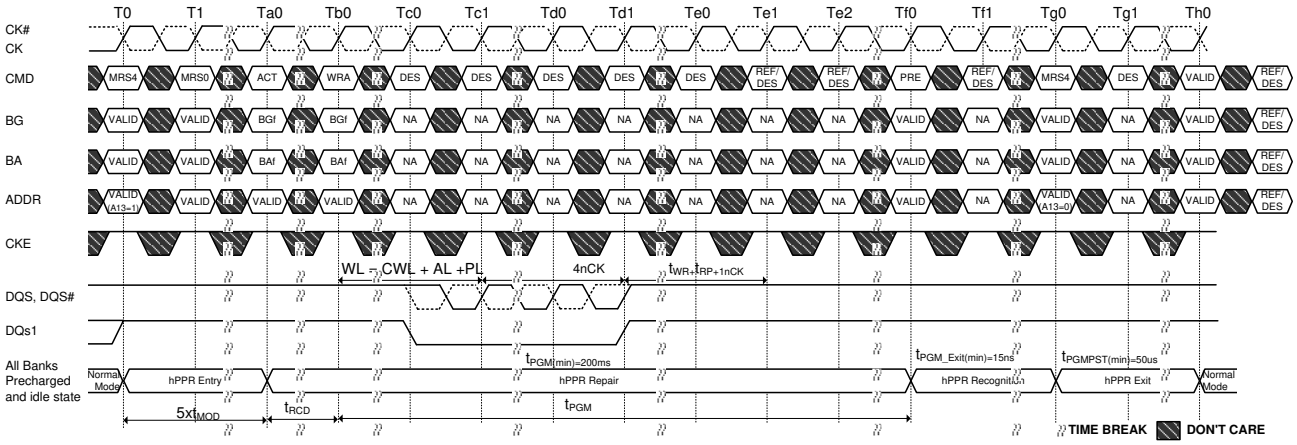

NOTE 1. Allow REF(1X) from PL+WL+BL/2+t_{WR}+t_{RP} after WR
NOTE 2. Timing diagram shows possible commands but not all shown can be issued at same time; for example if REF is issued at Te1, DES must be issued At Te2 as REF would be illegal at Te2. Likewise, DES must be issued t_{RFC} prior to PRE at Tf0. All regular timings must still be satisfied.

Figure 167. Hard Fail Row Repair (WRA Case)

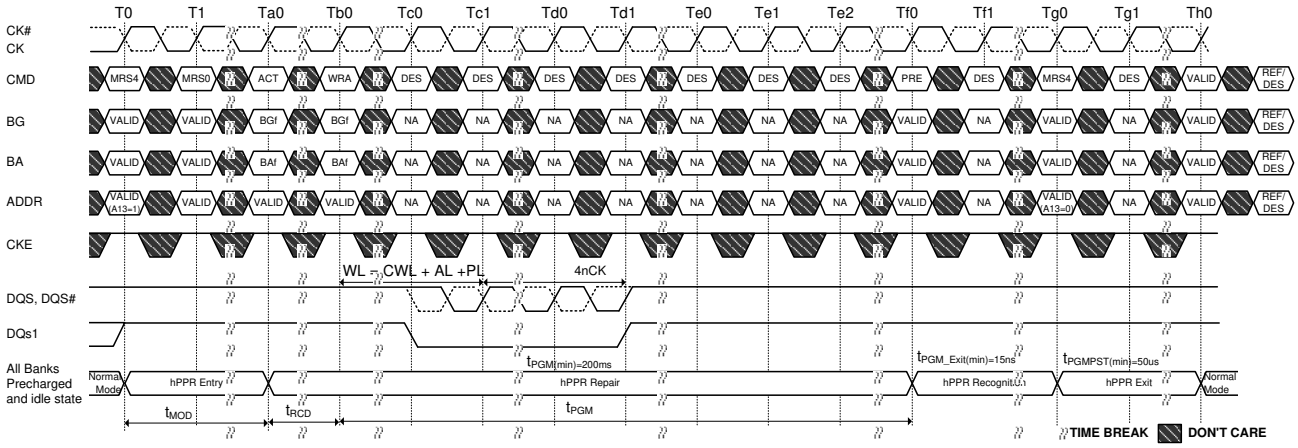

Figure 168. Hard Fail Row Repair (WR Case)

Programming hPPR and sPPR support in MPR0 page2

hPPR and sPPR is feature of DDR4 so Host can recognize if DRAM is supporting hPPR and sPPR or not by reading out MPR0 Page2.
MPR page2;
hard PPR is supported: [7] = 1
hard PPR is not supported: [7] = 0
soft PPR is supported: [6] = 1
soft PPR is not supported: [6] = 0

Required Timing Parameters

Repair requires additional time period to repair Hard Fail Row Address into spare Row address and the followings are requirement timing parameters for hPPR.

Table 54. hPPR Timing Parameters

Symbol	Parameter	Min.	Max.	Unit
t_{PGM}	hPPR Programming Time	1000	-	ms
t_{PGM_Exit}	hPPR Exit Time	15	-	ns
t_{PGMPST}	New Address Setting time	50	-	us

Soft Post Package Repair (sPPR)

Soft Post Package Repair (sPPR) is a way to quickly, but temporarily, Repair a row element in a Bank Group on a DDR4 DRAM device, contrasted to hard Post Package Repair which takes longer but is permanent repair of a row element. There are some limitations and differences between sPPR and hPPR.

Table 55. Description and Comparison of hPPR and sPPR

Topic	Soft Repair	Hard Repair	Note
Persistence of Repair	Volatile – repair persists while power is within operating range	Non-Volatile – repair is permanent after the repair cycle	sPPR cleared after power off or device reset
t_{PGM} (hPPR and sPPR programming Time)	WL+ $4t_{CK}+t_{WR}$	>1000ms(tPGM)	
# of Repair elements	1 per BG	1 per BG	Once hPPR is used within a BG, sPPR is no longer supported in that BG
Simultaneous use of soft and hard repair within a BG	Previous hPPR are allowed before soft repair to a different BG	Any outstanding sPPR must be cleared before a hard repair	Clearing sPPR occurs by either: (a) power down and power-up sequence or (b) Reset and re-initialize.
Repair Sequence	1 method – WR cmd.	2 methods WRA and WR	
Bank(1) not having row repair retains array data	Yes	Yes, if WRA sequence; No, if WR sequence	WRA sequence requires use of REF commands
Bank(1) having row repair retain array data	Yes, except for seed and associated rows	No	sPPR must be performed outside of REF window (t_{RFC})

Note 1. If a BA pin is defined to be an “sPPR associated row” to the seed row, both states of the BA address input are affected. For example if BA0 is selected as an “sPPR associated row” to the seed row, addresses in both BA0 = 0 and BA0 = 1 are equally affected.

sPPR mode is entered in a similar fashion as hPPR, sPPR uses MR4 bit A5 while hPPR uses MR4 bit A13; sPPR requires the same guard key sequence as hPPR to qualify the MR4 PPR entry. Prior to sPPR entry, either an hPPR exit command or an sPPR exit command should be performed, which ever was the last PPR entry. After sPPR entry, an ACT command will capture the target bank and target row, herein seed row, where the row repair will be made. After t_{RCD} time, a WR command is used to select the individual DRAM, through the DQ bits, to transfer the repair address into an internal register in the DRAM. After a write recovery time and PRE command, the sPPR mode can be exited and normal operation can resume. The DRAM will retain the sPPR change as long as V_{DD} remains within the operating region. If the DRAM power is removed or the DRAM is reset, all sPPR changes will revert to the unrepaired state. sPPR changes must be cleared by either a power-up sequence or re-initialization by reset signal before hPPR mode is enabled.

DDR4 sPPR can repair one row per Bank Group, however when the hPPR resources for a bank group have been used, sPPR resources are no longer available for that bank group. If an sPPR or hPPR repair sequence is issued to a bank group with PPR resource un-available, the DRAM will ignore the programming sequence. sPPR mode is optional for 8Gb density DDR4 device.

The bank receiving sPPR change is expected to retain array data in all other rows except for the seed row and its associated row addresses. If the user does not require the data in the array in the bank under sPPR repair to be retained, then the handling of the seed row’s associated row addresses is not of interest and can be ignored. If the user requires the data in the array to be retained in the bank under sPPR mode, then prior to executing the sPPR mode, the seed row and its associated row addresses should be backed up and restored after sPPR has been completed. sPPR associated seed row addresses are specified in the table below.

Table 56. sPPR Associated Row Address

sPPR Associated Row Addresses						
BA0	A16	A15	A14	A13	A1	A0

Soft Repair of a Fail Row Address

The following is the procedure of sPPR with WR command. Note that during the soft repair sequence, no refresh is allowed.

1. Before entering 'sPPR' mode, all banks must be Precharged; DBI and CRC Modes must be disabled.
2. Enable sPPR using MR4 bit "A5=1" and wait t_{MOD}.
3. Issue Guard Key as four consecutive MR0 commands each with a unique address field A[17:0]. Each MR0 command should space by tMOD. MR0 Guard Key sequence is same as hPPR.
4. Issue ACT command with the Bank and Row Fail address, Write data is used to select the individual DRAM in the Rank for repair.
5. A WR command is issued after t_{RCD}, with valid column address. The DRAM will ignore the column address given with the WR command.
6. After WL (WL = CWL + AL + PL), All DQs of Target DRAM should be low for $4t_{CK}$. If high is driven to All DQs of a DRAM consecutively for equal to or longer than first $2t_{CK}$, then DRAM does not conduct sPPR. If all DQs are neither low for $4t_{CK}$ nor high for equal to or longer than first $2t_{CK}$, then sPPR mode execution is unknown.
7. Wait t_{WR} for the internal repair register to be written and then issue PRE to the Bank.
8. Wait 20ns after PRE which allow DRAM to recognize repaired Row address.
9. Exit PPR with setting MR4 bit "A5=0" and wait t_{MOD}.
10. One soft repair address per Bank Group is allowed before a hard repair is required. When more than one sPPR request is made to the same BG, the most recently issued sPPR address would replace the early issued one. In the case of conducting soft repair address in a different Bank Group, Repeat Step 2 to 9. During a soft Repair, Refresh command is not allowed between sPPR MRS entry and exit.

Once sPPR mode is exited, to confirm if target row is repaired correctly, the host can verify the repair by writing data into the target row and reading it back after sPPR exit with MR4 [A5=0].

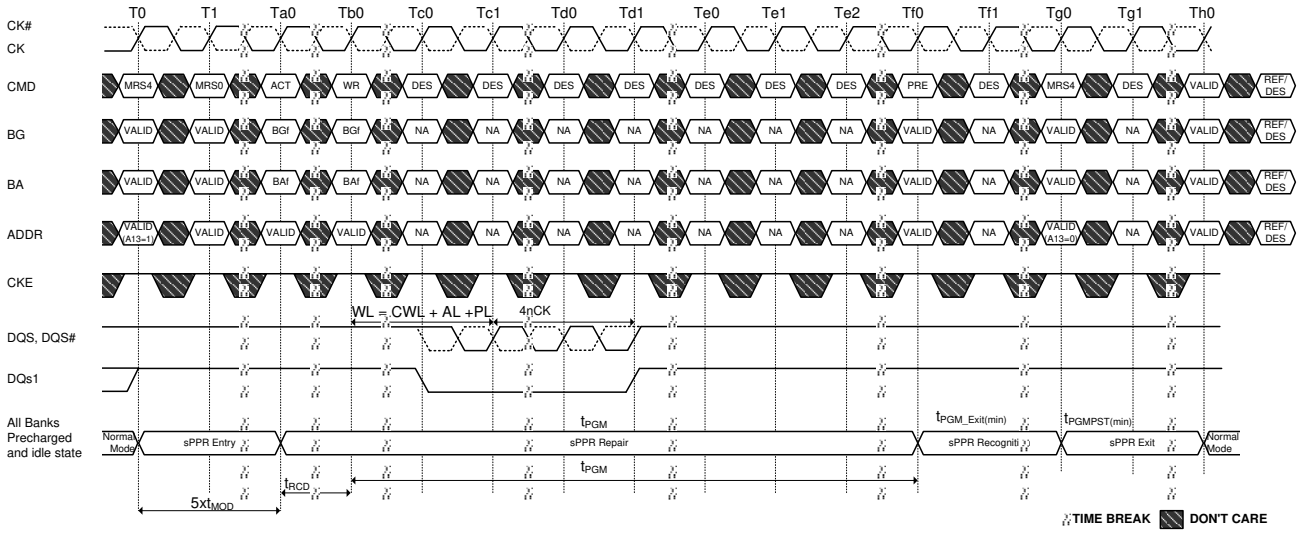

Figure 169. Fail Row Soft PPR (WR Case)

On-Die Termination

ODT (On-Die Termination) is a feature of the DDR4 SDRAM that allows the DRAM to change termination resistance for each DQ,DQS, DQS# and DM# for x8 configuration (and TDQS, TDQS# for x8 configuration, when enabled via A11=1 in MR1) via the ODT control pin or Write Command or Default Parking value with MR setting. The ODT feature is designed to improve signal integrity of the memory channel by allowing the DRAM controller to independently change termination resistance for any or all DRAM devices.

The ODT feature is turned off and not supported in Self-Refresh mode. A simple functional representation of the DRAM ODT feature is shown below.

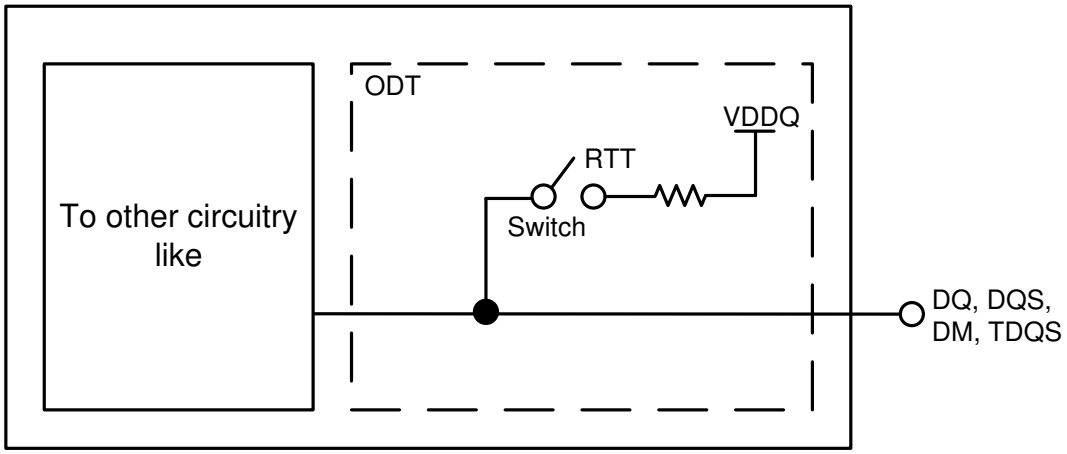

Figure 170. Functional Representation of ODT

The switch is enabled by the internal ODT control logic, which uses the external ODT pin and Mode Register Setting and other control information, see below. The value of R_{TT} is determined by the settings of mode register bits (see Mode Register). The ODT pin will be ignored if the mode register MR1 is programmed to disable R_{TT_NOM} (MR1 A [10:8] = 000) and in self refresh mode.

ODT Mode Register and ODT State Table

The ODT Mode of DDR4 device has 4 states, Data Termination Disable, R_{TT_WR}, R_{TT_NOM} and R_{TT_PARK}. And the ODT Mode is enabled if any of MR1 A[10:8] or MR2 A[10:9] or MR5 A[8:6] are non zero. When enabled, the value of R_{TT} is determined by the settings of these bits.

After entering Self-Refresh mode, DRAM automatically disables ODT termination and set Hi-Z as termination state regardless of these setting.

Controller can control each R_{TT} condition with WR/RD command and ODT pin

- R_{TT_WR}: The rank that is being written to provide termination regardless of ODT pin status (either high or low)
- R_{TT_NOM}: DRAM turns ON R_{TT_NOM} if it sees ODT asserted (except ODT is disabled by MR1).
- R_{TT_PARK}: Default parked value set via MR5 to be enabled and ODT pin is driven low.
- Data Termination Disable: DRAM driving data upon receiving Read command disables the termination after RL-X and stays off for a duration of BL/2 + X clock cycles. (X is 2 for $1t_{CK}$ and 3 for $2t_{CK}$ preamble mode).

The R_{TT} values have the following priority:

which means if there is Write command along with ODT pin high, then DRAM turns on R_{TT_WR} not R_{TT_NOM}, and also if there is Read command, then DRAM disables data termination regardless of ODT pin and goes into driving mode.

- Data termination disable
- R_{TT_WR}
- R_{TT_NOM}
- R_{TT_PARK}

Table 57. Termination State Table

R_{TT_PARK} MR5[8:6]	R_{TT_NOM} MR1[10:8]	ODT pin	DRAM termination state	Note
Enabled	Enabled	High	R_{TT_NOM}	1,2
		Low	R_{TT_PARK}	1,2
	Disabled	Don't care [3]	R_{TT_PARK}	1,2,3
Disabled	Enabled	High	R_{TT_NOM}	1,2
		Low	Hi-Z	1,2
	Disabled	Don't care [3]	Hi-Z	1,2,3

Note 1. When a read command is executed, DRAM termination state will be High-Z for defined period independent of ODT pin and MR setting of R_{TT_PARK}/R_{TT_NOM}. This is described in the ODT during Read section.
Note 2. If R_{TT_WR} is enabled, R_{TT_WR} will be activated by write command for defined period time independent of ODT pin and MR setting of R_{TT_PARK} /R_{TT_NOM}. This is described in the Dynamic ODT section.
Note 3. If R_{TT_NOM} MR is disabled, ODT receiver power will be turned off to save power.

On-die termination effective resistances are defined and can be selected by any or all of the following options:

- MR1 A[10:8] (R_{TT_NOM}) - Disable, 240Ω, 120Ω, 80Ω, 60Ω, 48Ω, 40Ω, and 34Ω.
- MR2 A[11:9] (R_{TT_WR}) - Disable, 240Ω,120Ω, and 80Ω.
- MR5 A[8:6] (R_{TT_PARK}) - Disable, 240Ω, 120Ω, 80Ω, 60Ω, 48Ω, 40Ω, and 34Ω.

ODT is applied to the following inputs:

- x8: DQs, DM#, DQS, DQS#, TDQS, and TDQS# inputs.

ODT Definition of Voltages and Currents

On die termination effective Rtt values supported are 240, 120, 80, 60, 48, 40, 34 ohms.

$$R_{TT} = \frac{V_{DDQ} - Vout}{|Iout|}$$

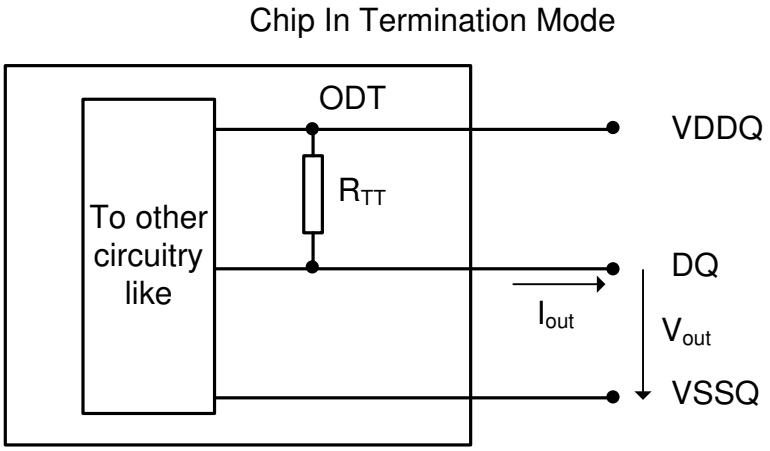

Figure 171. On Die Termination

Table 58. ODT Electrical Characteristics RZQ=240Ω ±1% entire temperature operation range; after proper ZQ calibration

R_{TT}	Vout	Min.	Nom.	Max.	Unit	Note
240Ω	V_{OL}dc= 0.5 x V_{DDQ}	0.9	1	1.25	RZQ	1,2,3
	V_{OM}dc= 0.8 x V_{DDQ}	0.9	1	1.1	RZQ	1,2,3
	V_{OH}dc= 1.1 x V_{DDQ}	0.8	1	1.1	RZQ	1,2,3
120Ω	V_{OL}dc= 0.5 x V_{DDQ}	0.9	1	1.25	RZQ/2	1,2,3
	V_{OM}dc= 0.8 x V_{DDQ}	0.9	1	1.1	RZQ/2	1,2,3
	V_{OH}dc= 1.1 x V_{DDQ}	0.8	1	1.1	RZQ/2	1,2,3
80Ω	V_{OL}dc= 0.5 x V_{DDQ}	0.9	1	1.25	RZQ/3	1,2,3
	V_{OM}dc= 0.8 x V_{DDQ}	0.9	1	1.1	RZQ/3	1,2,3
	V_{OH}dc= 1.1 x V_{DDQ}	0.8	1	1.1	RZQ/3	1,2,3
60Ω	V_{OL}dc= 0.5 x V_{DDQ}	0.9	1	1.25	RZQ/4	1,2,3
	V_{OM}dc= 0.8 x V_{DDQ}	0.9	1	1.1	RZQ/4	1,2,3
	V_{OH}dc= 1.1 x V_{DDQ}	0.8	1	1.1	RZQ/4	1,2,3
48Ω	V_{OL}dc= 0.5 x V_{DDQ}	0.9	1	1.25	RZQ/5	1,2,3
	V_{OM}dc= 0.8 x V_{DDQ}	0.9	1	1.1	RZQ/5	1,2,3
	V_{OH}dc= 1.1 x V_{DDQ}	0.8	1	1.1	RZQ/5	1,2,3
40Ω	V_{OL}dc= 0.5 x V_{DDQ}	0.9	1	1.25	RZQ/6	1,2,3
	V_{OM}dc= 0.8 x V_{DDQ}	0.9	1	1.1	RZQ/6	1,2,3
	V_{OH}dc= 1.1 x V_{DDQ}	0.8	1	1.1	RZQ/6	1,2,3
34Ω	V_{OL}dc= 0.5 x V_{DDQ}	0.9	1	1.25	RZQ/7	1,2,3
	V_{OM}dc= 0.8 x V_{DDQ}	0.9	1	1.1	RZQ/7	1,2,3
	V_{OH}dc= 1.1 x V_{DDQ}	0.8	1	1.1	RZQ/7	1,2,3
DQ-DQ Mismatch within byte	V_{OM}dc= 0.8 x V_{DDQ}	0	-	10	%	1,2,4,5,6

Note 1. The tolerance limits are specified after calibration with stable voltage and temperature. For the behavior of the tolerance limits if temperature or voltage changes after calibration, see following section on voltage and temperature sensitivity.

Note 2. Pull-up ODT resistors are recommended to be calibrated at 0.8 x V_{DDQ}. Other calibration schemes may be used to achieve the linearity spec shown above, e.g. calibration at 0.5 x V_{DDQ} and 1.1 x V_{DDQ}.

Note 3. The tolerance limits are specified under the condition that V_{DDQ}=V_{DD} and V_{SSQ}=V_{SS}.

Note 4. DQ to DQ mismatch within byte variation for a given component including DQS and DQS#. (characterized)

Note 5. R_{TT} variance range ratio to R_{TT} Nominal value in a given component, including DQS and DQS#.

$$\text{DQ-DQ Mismatch in a Device} = \frac{R_{TTMax} - R_{TTMin}}{R_{TTNOM}} \times 100$$

Note 6. This parameter of x16 device is specified for Upper byte and Lower byte.

Synchronous ODT Mode

Synchronous ODT mode is selected whenever the DLL is turned on and locked. Based on the power-down definition, these modes are:

- Any bank active with CKE high
- Refresh with CKE high
- Idle mode with CKE high
- Active power-down mode (regardless of MR1 bit A10)
- Precharge power-down mode

In synchronous ODT mode, R_{TT_NOM} will be turned on DODTLon clock cycles after ODT is sampled high by a rising clock edge and turned off DODTLoff clock cycles after ODT is registered low by a rising clock edge. The ODT latency is tied to the Write Latency (WL = CWL + AL + PL) by: DODTLon = WL - 2; DODTLoff = WL - 2. When operating in $2t_{CK}$ Preamble Mode, The ODT latency must be 1 clock smaller than in $1t_{CK}$ Preamble Mode; DODTLon = WL - 3; DODTLoff = WL - 3. (WL = CWL+AL+PL)

ODT Latency and Posted ODT

In Synchronous ODT Mode, the Additive Latency (AL) and the Parity Latency (PL) programmed into the Mode Register MR1 applies to ODT Latencies as shown below:

Table 59. ODT Latency

Symbol	Parameter	1 t_{CK} Preamble	2 t_{CK} Preamble	Unit
DODTLon	Direct ODT turn on Latency	CWL + AL + PL - 2	CWL + AL + PL - 3	t_{CK}
DODTLoff	Direct ODT turn off Latency	CWL + AL + PL - 2	CWL + AL + PL - 3	t_{CK}
RODTLoff	Read command to internal ODT turn off Latency	CL + AL + PL - 2	CL + AL + PL - 3	t_{CK}
RODTLon4	Read command to R_{TT_PARK} turn on Latency in BC4	RODTLoff + 4	RODTLoff + 5	t_{CK}
RODTLon8	Read command to R_{TT_PARK} turn on Latency in BC8/BL8	RODTLoff + 6	RODTLoff + 7	t_{CK}
ODTH4	ODT Assertion time, BC4 mode	4	5	t_{CK}
ODTH8	ODT Assertion time, BL8 mode	6	7	t_{CK}

Timing Parameter

In synchronous ODT mode, the following parameters apply:

- DODTLon, DODTLoff, RODTLoff, RODTLon4, RODTLon8, $t_{ADC\ (MIN)\ (MAX)}$.
- $t_{ADC\ (MIN)}$ and $t_{ADC\ (MAX)}$ are minimum and maximum R_{TT} change timing skew between different termination values. These timing parameters apply to both the synchronous ODT mode and the data termination disable mode.

When ODT is asserted, it must remain high until minimum ODTH4 (BL = 4) or ODTH8 (BL = 8) is satisfied. Additionally, depending on CRC or $2t_{CK}$ preamble setting in MRS, ODTH should be adjusted.

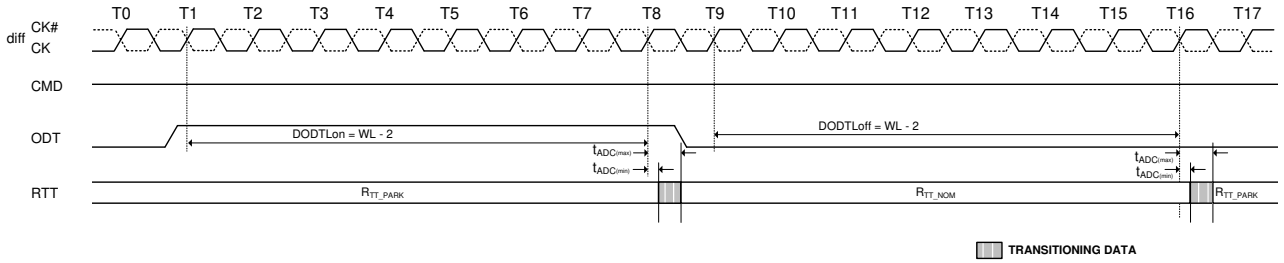

Figure 172. Synchronous ODT Timing Example for CWL=9, AL=0, PL=0; DODTLon=WL-2=7; DODTLoff=WL-2=7

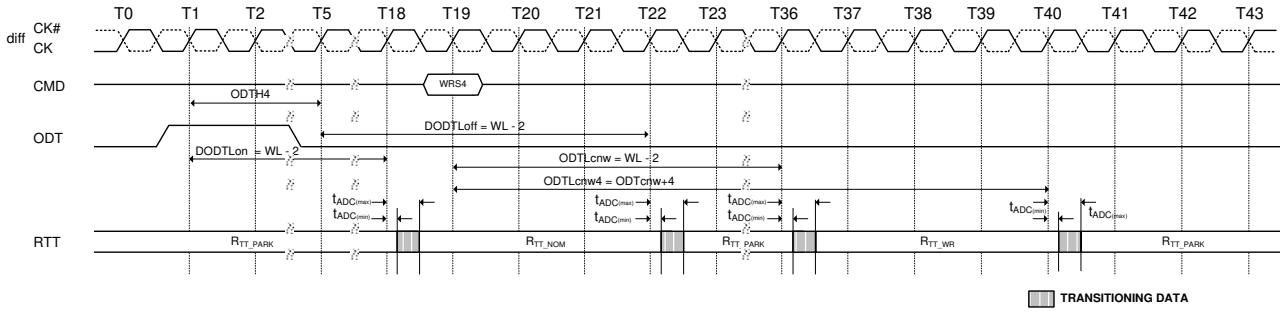

Figure 173. Synchronous ODT example with BL=4, CWL=9, AL=10, PL=0; DODTLon/off=WL-2=17, ODTcnw=WL-2=17

ODT must be held high for at least ODTH4 after assertion (T1). ODTHis measured from ODT first registered high to ODT first registered low, or from registration of Write command. Note that ODTH4 should be adjusted depending on CRC or $2t_{CK}$ preamble setting.

ODT During Reads

Because the DDR4 DRAM cannot terminate with R_{TT} and drive with R_{ON} at the same time; R_{TT} may nominally not be enabled until the end of the postamble as shown in the example below. At cycle T25, the device turns on the termination when it stops driving, which is determined by t_{HZ}. If the DRAM stops driving early (that is, t_{HZ} is early), then $t_{ADC\ (MIN)}$ timing may apply. If the DRAM stops driving late (that is, t_{HZ} is late), then the DRAM complies with $t_{ADC\ (MAX)}$ timing.

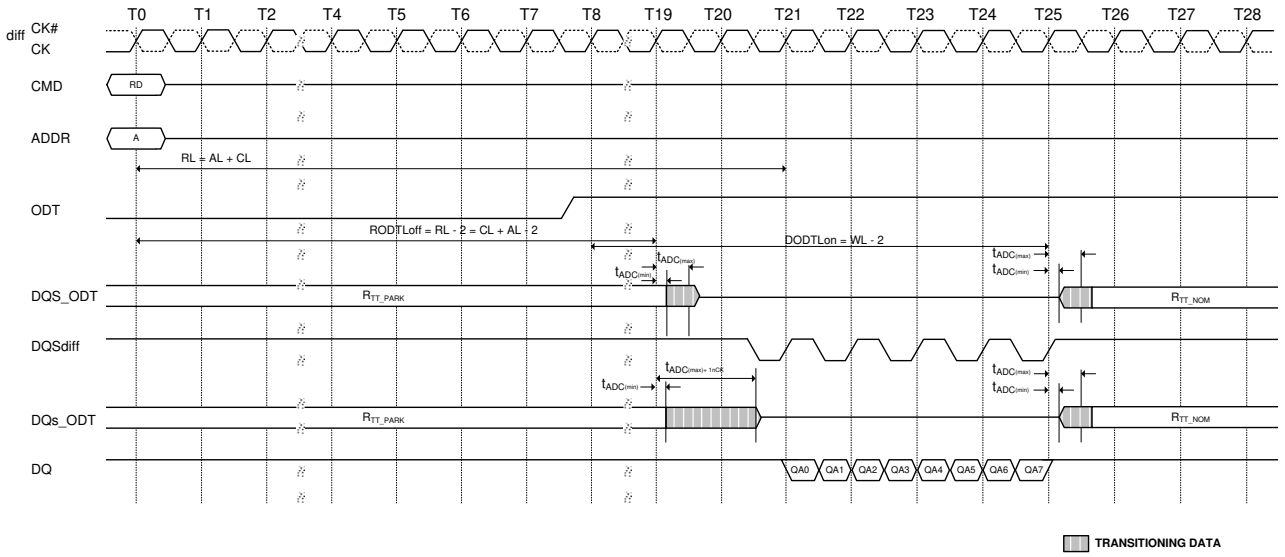

Figure 174. Example: CL=11, PL=0; AL=CL-1=10; RL=AL+PL+CL=21; CWL=9; DODTLon=AL+CWL-2=17; DODTLoff=AL+CWL-2=17; 1tCK preamble)

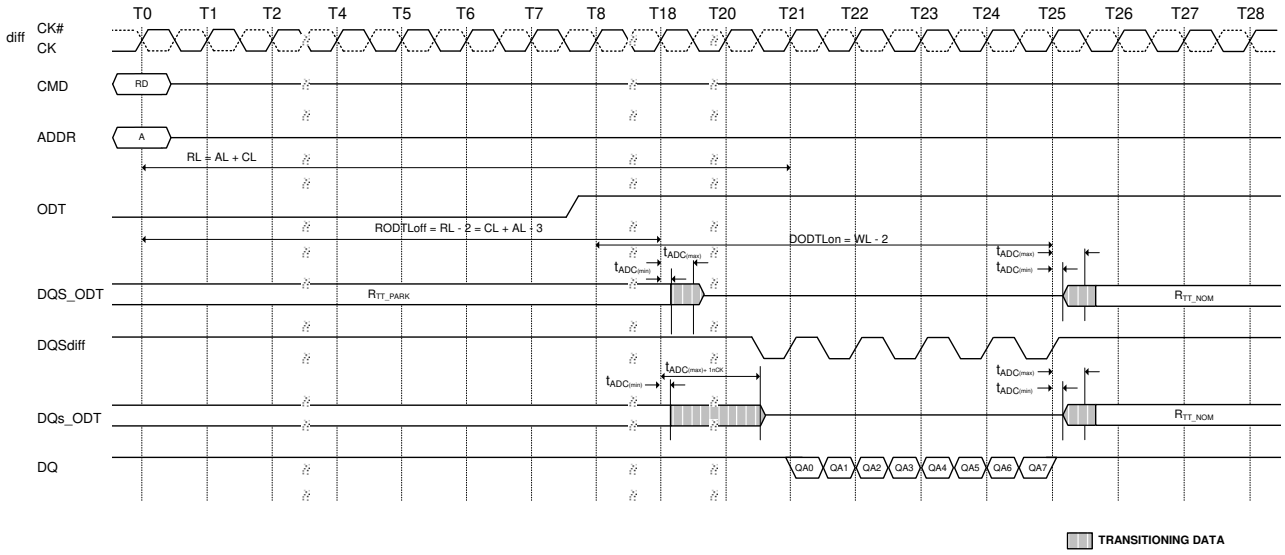

Figure 175. Example: CL=11, PL=0; AL=CL-1=10; RL=AL+PL+CL=21; CWL=9; DODTLon=AL+CWL-2=17; DODTLoff=AL+CWL-2=17; 2tCK preamble)

Dynamic ODT

In certain application cases and to further enhance signal integrity on the data bus, it is desirable that the termination strength of the device can be changed without issuing an MRS command. This requirement is supported by the dynamic ODT feature, described below.

Functional Description

The dynamic ODT mode is enabled if bit A9 or A10 of MR2 is set to 1.

- Three R_{TT} values are available: R_{TT_NOM}, R_{TT_WR}, and R_{TT_PARK}.
  - The value for R_{TT_NOM} is preselected via bits MR1 A[10:8].
  - The value for R_{TT_WR} is preselected via bits MR2 A[11:9].
  - The value for R_{TT_PARK} is preselected via bits MR5 A[8:6].
- During operation without write commands, the termination is controlled as follows:
  - Nominal termination strength R_{TT_NOM} or R_{TT_PARK} is selected.
  - R_{TT_NOM} on/off timing is controlled via ODT pin and latencies DODTLon and DODTLoff; and R_{TT_PARK} is on when ODT is LOW.
- When a write command (WR, WRA, WRS4, WRS8, WRAS4, WRAS8) is registered, and if Dynamic ODT is enabled, the termination is controlled as follows:
  - Latency ODTLcnw after the write command, termination strength R_{TT_WR} is selected.
  - Latency ODTLcwn8 (for BL8, fixed by MRS or selected OTF) or ODTLcwn4 (for BC4, fixed by MRS or selected OTF) after the write command, termination strength R_{TT_WR} is deselected.
  - One or two clocks will be added into or subtracted from ODTLcwn8 and ODTLcwn4, depending on write CRC Mode and/or 2 t_{CK} preamble enablement. The following table shows latencies and timing parameters which are relevant for the on-die termination control in dynamic ODT mode.

The dynamic ODT feature is not supported in DLL-off mode. MRS command must be used to set R_{TT_WR}, MR2 A[11:9] = 000, to disable dynamic ODT externally.

Table 60. Latencies and timing parameters relevant for Dynamic ODT with 1t_{CK} preamble mode and CRC disabled

Name and Description	Abbr.	Defined from	Define to	Definition for all DDR4 speed bins	Unit
ODT Latency for changing from R_{TT_PARK}/R_{TT_NOM} to R_{TT_WR}	ODTLcnw	Registering external write command	Change R_{TT} strength from R_{TT_PARK}/R_{TT_NOM} to R_{TT_WR}	ODTLcnw = WL - 2	t_{CK}
ODT Latency for change from R_{TT_WR} to R_{TT_PARK}/R_{TT_NOM} (BL = 4)	ODTLcwn4	Registering external write command	Change R_{TT} strength from R_{TT_WR} to R_{TT_PARK}/R_{TT_NOM}	ODTLcwn4 = 4 + ODTLcnw	t_{CK}
ODT Latency for change from R_{TT_WR} to R_{TT_PARK}/R_{TT_NOM} (BL = 8)	ODTLcwn8	Registering external write command	Change R_{TT} strength from R_{TT_WR} to R_{TT_PARK}/R_{TT_NOM}	ODTLcwn8 = 6 + ODTLcnw	t_{CK}
RTT change skew	t_{ADC}	ODTLcnw ODTLcwn	R_{TT} Valid	$t_{ADC(min)}$ = 0.3 $t_{ADC(max)}$ = 0.7	t_{CK}

Table 61. Latencies and timing parameters relevant for Dynamic ODT with 1t_{CK} and 2t_{CK} preamble mode and CRC enabled/disabled

Symbol	1t_{CK} Preamble		2t_{CK} Preamble		Unit
	CRC off	CRC on	CRC off	CRC on	
ODTLcnw	WL - 2	WL - 2	WL - 3	WL - 3	t_{CK}
ODTLcwn4	ODTLcnw +4	ODTLcnw +7	ODTLcnw +5	ODTLcnw +8	t_{CK}
ODTLcwn8	ODTLcnw +6	ODTLcnw +7	ODTLcnw +7	ODTLcnw +8	t_{CK}

ODT Timing Diagrams

The following pages provide example timing diagrams

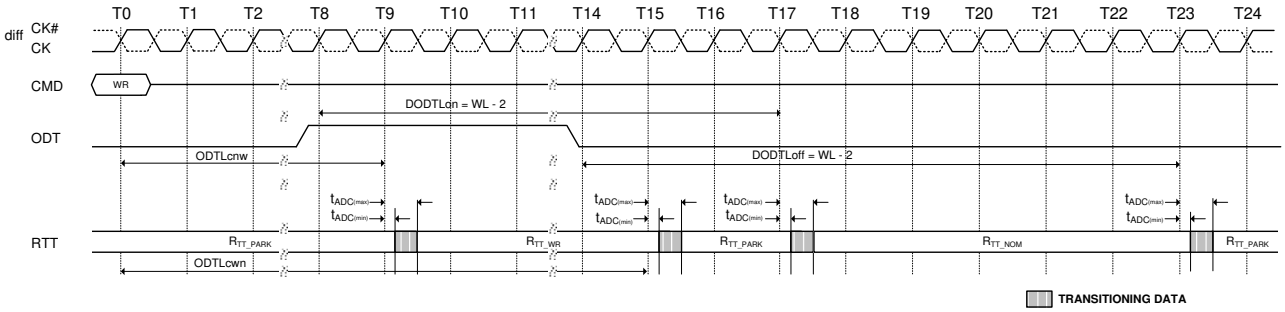

Figure 176. ODT timing (Dynamic ODT, 1tCK preamble, CL=14, CWL=11, BL=8, AL=0, CRC Disabled)

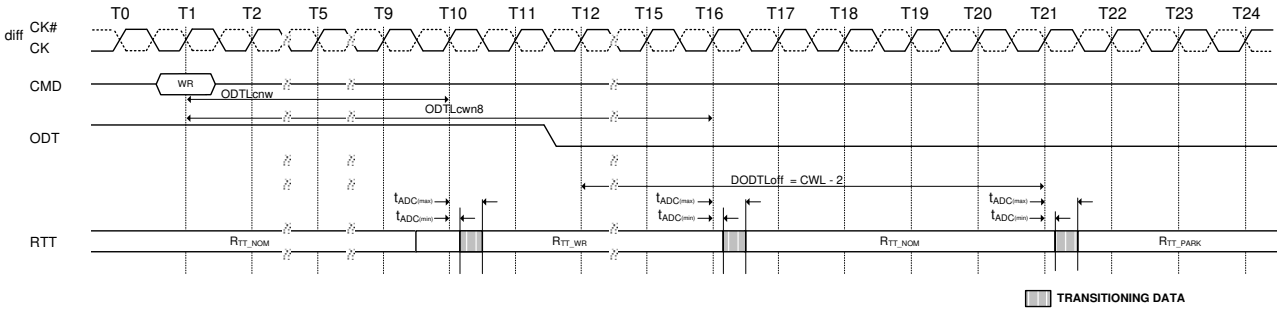

Figure 177. Dynamic ODT overlapped with Rtt_NOM (CL=14, CWL=11, BL=8, AL=0, CRC Disabled)

Asynchronous ODT Mode

Asynchronous ODT mode is selected when DLL is disabled by MR1 bit A0=’0’b.

In asynchronous ODT timing mode, internal ODT command is not delayed by either the Additive latency (AL) or relative to the external ODT signal (R_{TT_NOM}). In asynchronous ODT mode, the following timing parameters apply $t_{AONAS,min,\ max}$, $t_{AOFAS,min,max}$.

Minimum R_{TT_NOM} turn-on time ($t_{AONASmin}$) is the point in time when the device termination circuit leaves R_{TT_PARK} and ODT resistance begins to change. Maximum R_{TT_NOM} turn on time ($t_{AONASmax}$) is the point in time when the ODT resistance is reached R_{TT_NOM}.

$t_{AONASmin}$ and $t_{AONASmax}$ are measured from ODT being sampled high.
Minimum R_{TT_NOM} turn-off time ($t_{AOFASmin}$) is the point in time when the devices termination circuit starts to leave R_{TT_NOM}.
Maximum R_{TT_NOM} turn-off time ($t_{AOFASmax}$) is the point in time when the on-die termination has reached R_{TT_PARK}.
$t_{AOFASmin}$ and $t_{AOFASmax}$ are measured from ODT being sampled low.

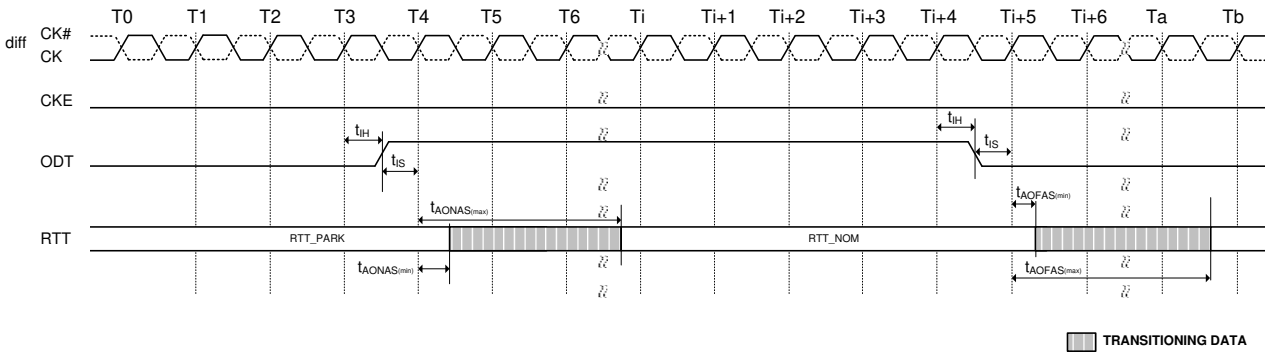

Figure 178. Asynchronous ODT Timing on DDR4 SDRAM with DLL-off

ODT buffer disabled mode for Power down

DRAM does not provide R_{TT_NOM} termination during power down when ODT input buffer deactivation mode is enabled in MR5 bit A5. To account for DRAM internal delay on CKE line to disable the ODT buffer and block the sampled output, the host controller must continuously drive ODT to either low or high when entering power down (from tDODToff+1 prior to CKE low till t_{CPDED} after CKE low). The ODT signal may be floating after $t_{CPDEDmin}$ has expired. In this mode, R_{TT_NOM} termination corresponding to sampled ODT at the input after CKE is first registered low (and t_{ANPD} before that) may be either R_{TT_NOM} or R_{TT_PARK}. t_{ANPD} is equal to (WL-1) and is counted backwards from PDE.

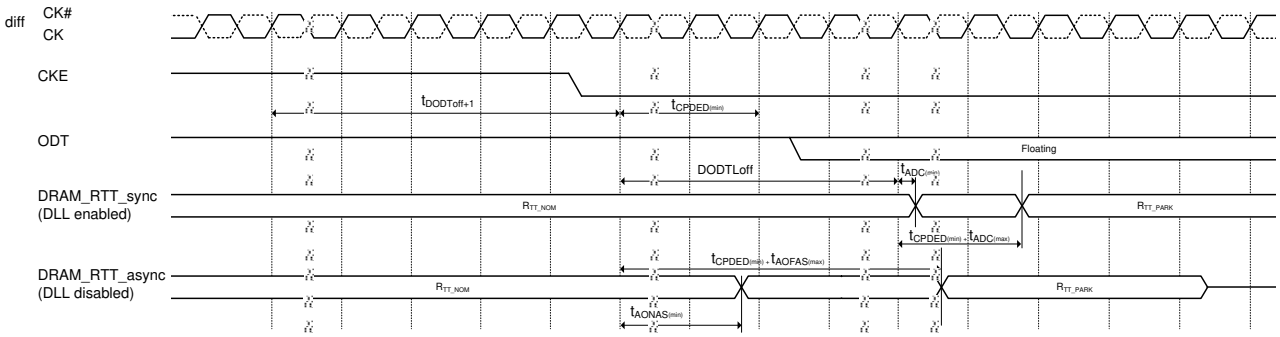

Figure 179. ODT timing for power down entry with ODT buffer disable mode

When exit from power down, along with CKE being registered high, ODT input signal must be re-driven and maintained low until t_{XP} is met.

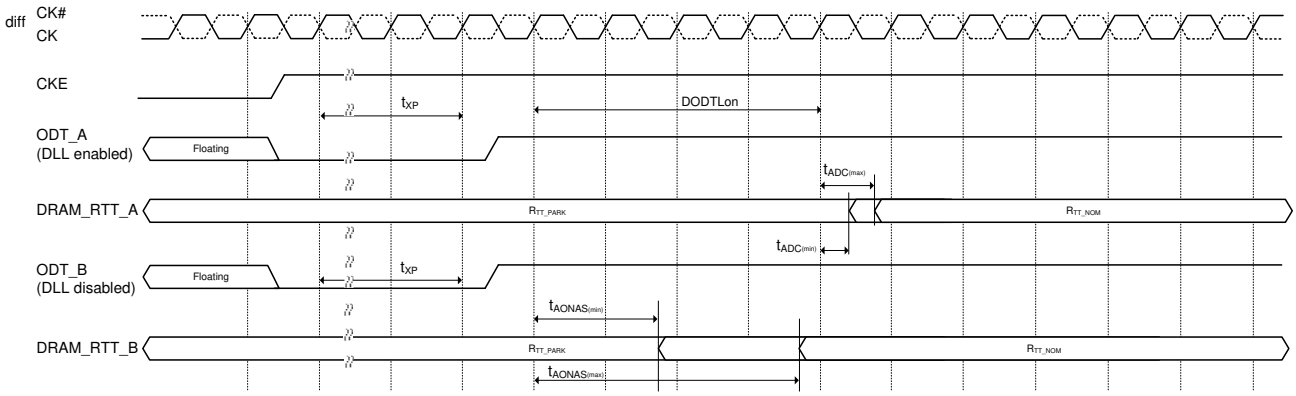

Figure 180. ODT timing for power down exit with ODT buffer disable mode

ODT Timing Definitions

Test Load for ODT Timings

Different than for timing measurements, the reference load for ODT timings is defined below

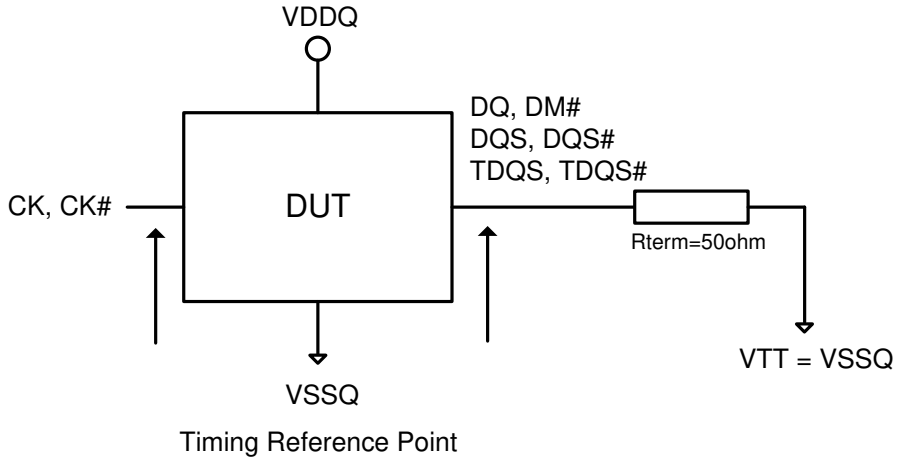

Figure 181. ODT Timing Reference Load

ODT Timing Definitions

Definitions for t_{ADC}, t_{AONAS} and t_{AOFAS} are provided in the table and measurement reference settings are provided in the subsequent. The t_{ADC} for the Dynamic ODT case and Read Disable ODT cases are represented by t_{ADC} of Direct ODT Control case.

Table 62. ODT Timing Definitions

Symbol	Begin Point Definition	End Point Definition
t_{ADC}	Rising edge of CK,CK# defined by the end point of DODTLoff	Extrapolated point at V_{RTT_NOM}
	Rising edge of CK,CK# defined by the end point of DODTLon	Extrapolated point at V_{SSQ}
	Rising edge of CK,CK# defined by the end point of ODTLcnw	Extrapolated point at V_{RTT_NOM}
	Rising edge of CK,CK# defined by the end point of ODTLcwn4 or ODTLcwn8	Extrapolated point at V_{SSQ}
t_{AONAS}	Rising edge of CK,CK# with ODT being first registered high	Extrapolated point at V_{SSQ}
t_{AOFAS}	Rising edge of CK,CK# with ODT being first registered low	Extrapolated point at V_{RTT_NOM}

Table 63. Reference Settings for ODT Timing Measurements

Measured Parameter	R_{TT_PARK}	R_{TT_NOM}	R_{TT_WR}	Vsw1	Vsw2	Note
t_{ADC}	Disable	RZQ/7	-	0.20V	0.40V	1,2
	-	RZQ/7	Hi-Z	0.20V	0.40V	1,3
t_{AONAS}	Disable	RZQ/7	-	0.20V	0.40V	1,2
t_{AOFAS}	Disable	RZQ/7	-	0.20V	0.40V	1,2

Note 1. MR setting is as follows.
- MR1 A10=1, A9=1, A8=1 (R_{TT_NOM}_Setting)
- MR5 A8=0, A7=0, A6=0 (R_{TT_PARK} Setting)
- MR2 A11=0, A10=1, A9=1 (R_{TT_WR} Setting)

Note 2. ODT state change is controlled by ODT pin.
Note 3. ODT state change is controlled by Write Command.

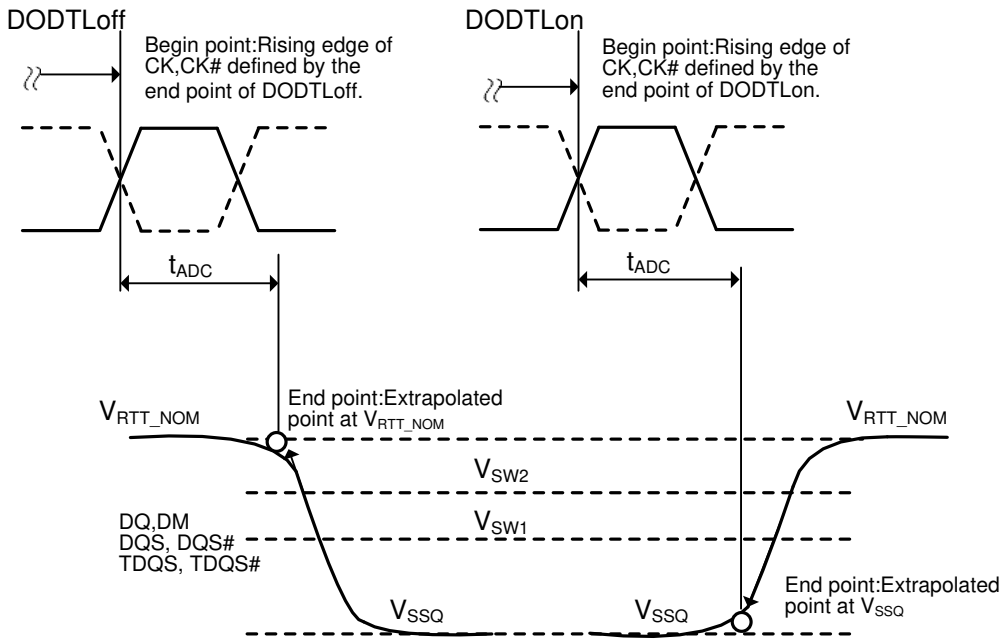

Figure 182. Definition of t_{ADC} at Direct ODT Control

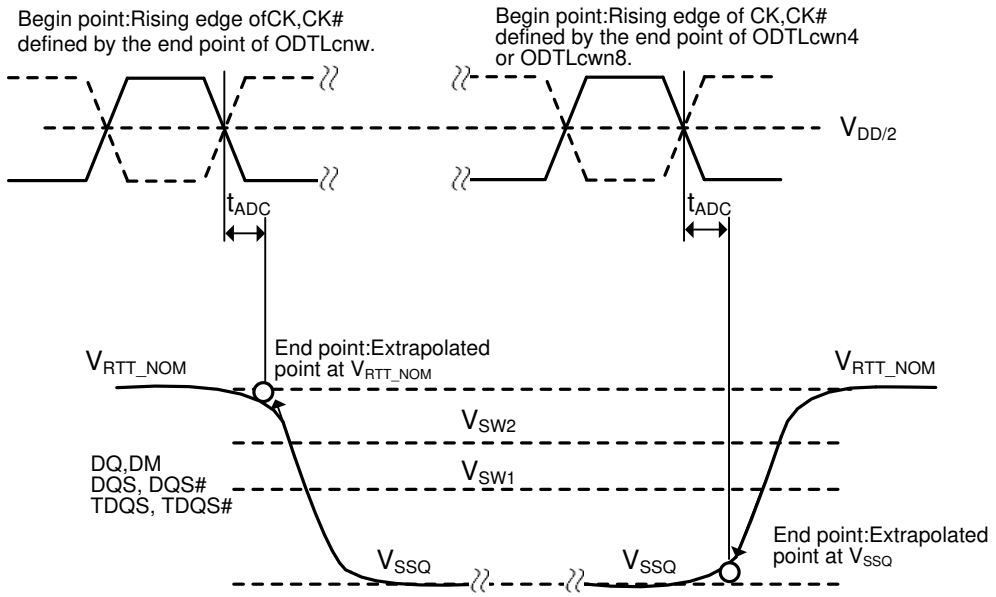

Figure 183. Definition of t_{ADC} at Dynamic ODT Control

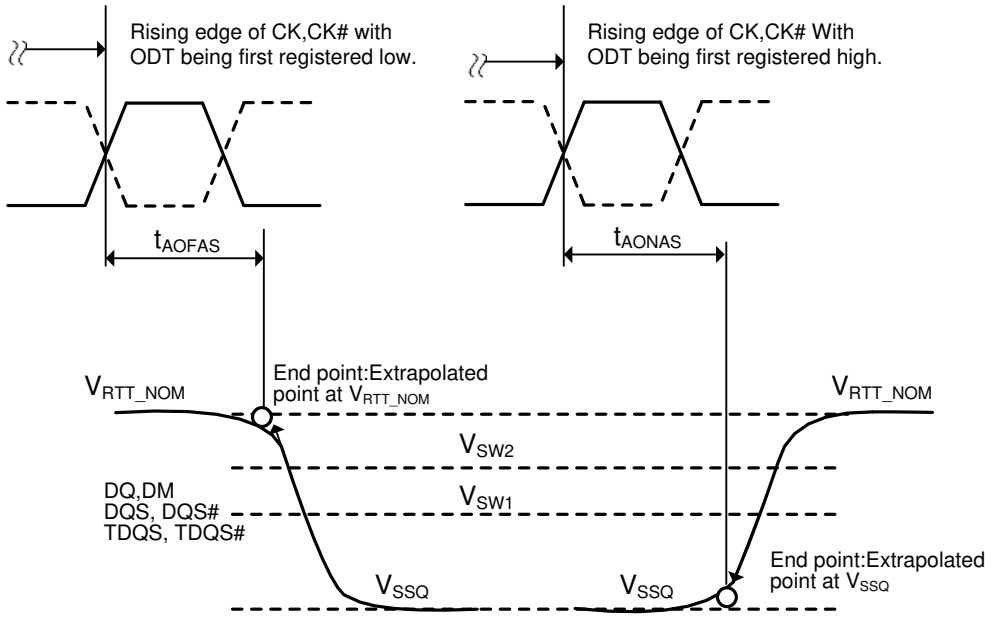

Figure 184. Definition of t_{AOFAS} and t_{AONAS}

Table 64. Absolute Maximum DC Ratings

Symbol	Parameter	Values	Unit	Note
V_{DD}	Voltage on V_{DD} pin relative to V_{SS}	-0.3 ~ 1.5	V	1,3
V_{DDQ}	Voltage on V_{DDQ} pin relative to V_{SS}	-0.3 ~ 1.5	V	1,3
V_{PP}	Voltage on V_{PP} pin relative to V_{SS}	-0.3 ~ 3.0	V	4
V_{IN}, V_{OUT}	Voltage on any pin except V_{REFCA} relative to V_{SS}	-0.3 ~ 1.5	V	1,3,5
T_{STG}	Storage Temperature	-55 ~ 100	°C	1,2

Note 1. Stresses greater than those listed under "Absolute Maximum Ratings" may cause permanent damage to the device. This is a stress rating only and functional operation of the device at these or any other conditions above those indicated in the operational sections of this specification is not implied. Exposure to absolute maximum rating conditions for extended periods may affect reliability.
Note 2. Storage Temperature is the case surface temperature on the center/top side of the DRAM. For the measurement conditions, please refer to JESD51-2 standard.
Note 3. V_{DD} and V_{DDQ} must be within 300 mV of each other at all times; and V_{REFCA} must be not greater than 0.6 x V_{DDQ}, When V_{DD} and V_{DDQ} are less than 500 mV; V_{REFCA} may be equal to or less than 300 mV.
Note 4. V_{PP} must be equal or greater than V_{DD}/V_{DDQ} at all times.
Note 5. Refer to overshoot area above 1.5 V.

Table 65. Temperature Range

Symbol	Parameter	Values	Unit	Note
T_{OPER}	Operating Temperature Range	-40 ~ 95	°C	1,2

Note 1. Operating temperature is the case surface temperature on center/top of the DRAM.
Note 2. Some applications require operation of the DRAM in the Extended Temperature Range between 85 °C and 95 °C case temperature. Full specifications are guaranteed in this range, but the following additional apply.
a. Refresh commands must be doubled in frequency, therefore, reducing the Refresh interval tREFI to 3.9us. It is also possible to specify a component with 1x refresh (tREFI to 7.8us) in the Extended Temperature Range.

Table 66. Recommended DC Operating Conditions

Symbol	Parameter	Min.	Typ.	Max.	Unit	Note
V_{DD}	Supply Voltage	1.14	1.2	1.26	V	1,2,3
V_{DDQ}	Supply Voltage for Output	1.14	1.2	1.26	V	1,2,3
V_{PP}	DRAM Activating Power Supply	2.375	2.5	2.75	V	3

Note 1. Under all conditions V_{DDQ} must be less than or equal to V_{DD}.
Note 2. V_{DDQ} tracks with V_{DD}. AC parameters are measured with V_{DD} and V_{DDQ} tied together.
Note 3. DC bandwidth is limited to 20MHz.

AC and DC Input Measurement Levels

Table 67. Single-Ended AC and DC Input Levels for Command and Address

Symbol	Parameter	DDR4-2666/3200		Unit	Note
		Min.	Max.		
$V_{IH.CA(DC65)}$	DC input logic high	V_{REFCA} + 0.065	V_{DD}	V	
$V_{IL.CA(DC65)}$	DC input logic low	V_{SS}	V_{REFCA} - 0.065	V	
$V_{IH.CA(AC90)}$	AC input logic high	V_{REF} + 0.09	-	V	1,2
$V_{IL.CA(AC90)}$	AC input logic low	-	V_{REF} - 0.09	V	1,2
$V_{REFCA(DC)}$	Reference Voltage for ADD, CMD inputs	0.49 x V_{DD}	0.51 x V_{DD}	V	2,3

Note 1. See “Overshoot and Undershoot Specifications”
Note 2. The AC peak noise on V_{REFCA} may not allow V_{REFCA} to deviate from $V_{REFCA(DC)}$ by more than ±1% V_{DD} (for reference: approx. ± 12mV)
Note 3. For reference: approx. VDD/2 ± 12 mV

AC and DC Input Measurement Levels: V_{REF} Tolerances

The dc-tolerance limits and ac-noise limits for the reference voltages V_{REFCA} is illustrated in the following figure. It shows a valid reference voltage $V_{REF}(t)$ as a function of time. (V_{REF} stands for V_{REFCA}).

V_{REF}(DC) is the linear average of $V_{REF}(t)$ over a very long period of time (e.g., 1 sec). This average has to meet the min/max requirements in previous page. Furthermore $V_{REF}(t)$ may temporarily deviate from V_{REF}(DC) by no more than ±1% V_{DD}.

The voltage levels for setup and hold time measurements V_{IH}(AC), V_{IH}(DC), V_{IL}(AC), and V_{IL}(DC) are dependent on V_{REF}.

"V_{REF} " shall be understood as V_{REF}(DC).

This clarifies that dc-variations of V_{REF} affect the absolute voltage a signal has to reach to achieve a valid high or low level and therefore the time to which setup and hold is measured. System timing and voltage budgets need to account for V_{REF}(DC) deviations from the optimum position within the data-eye of the input signals.

This also clarifies that the DRAM setup/hold specification and derating values need to include time and voltage associated with V_{REF} ac-noise. Timing and voltage effects due to ac-noise on V_{REF} up to the specified limit (±1% of V_{DD}) are included in DRAM timings and their associated deratings.

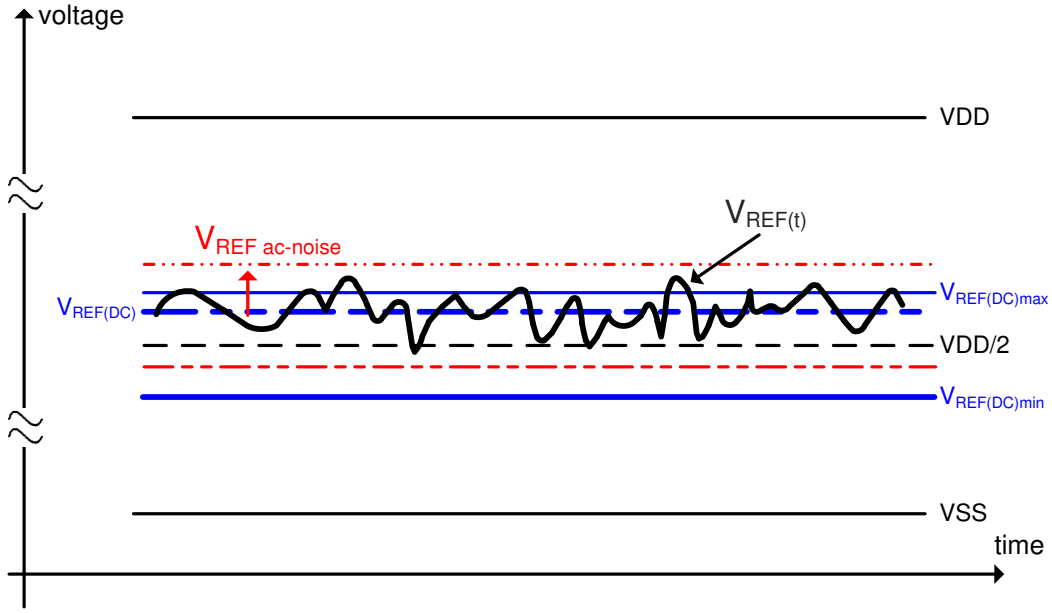

Figure 185. Illustration of V_{REF}(DC) tolerance and V_{REF} AC-noise limits

Differential signal definition

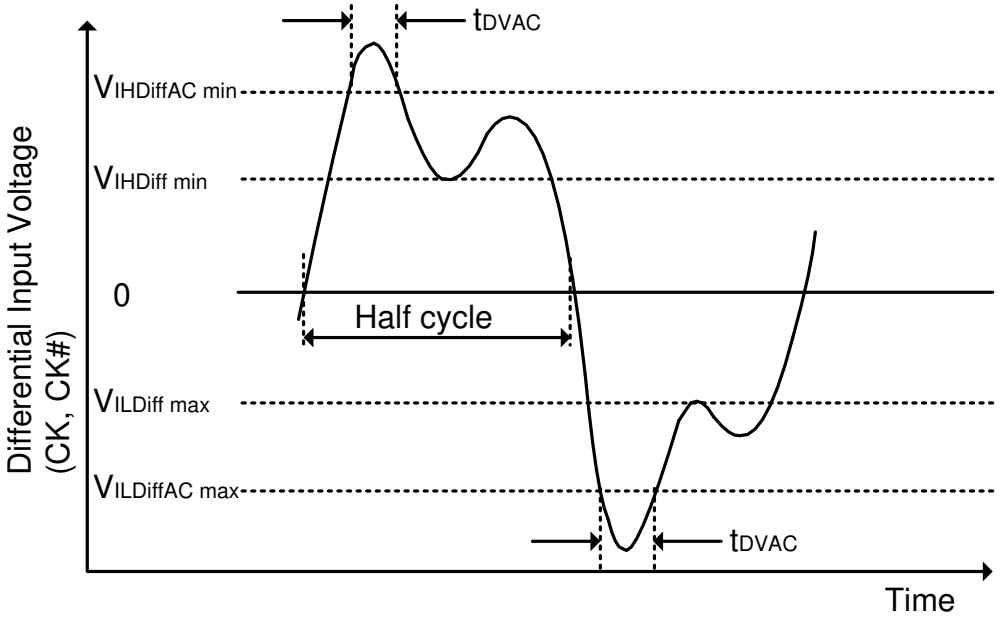

NOTE 1. Differential signal rising edge from VIL.DIFF.MAX to VIH.DIFF.MIN must be monotonic slope.
NOTE 2. Differential signal falling edge from VIH.DIFF.MIN to VIL.DIFF.MAX must be monotonic slope.

Figure 186. Definition of differential ac-swing and "time above ac-level" t_{DVAC}

Differential swing requirements for clock (CK – CK#)

Table 68. Differential AC and DC Input Levels

Symbol	Parameter	DDR4-2666		DDR4-3200		Unit	Note
		Min.	Max.	Min.	Max.		
V_{IHdiff}	Differential input high	135	-	110	-	mV	1,3
V_{ILdiff}	Differential input low	-	-135	-	-110	mV	1,3
$V_{IHdiff(AC)}$	Differential input high ac	2 x ($V_{IH(AC)}$ - V_{REF})	-	2 x ($V_{IH(AC)}$ - V_{REF})	-	V	2,3
$V_{ILdiff(AC)}$	Differential input low ac	-	2 x ($V_{IL(AC)}$ - V_{REF})	-	2 x ($V_{IL(AC)}$ - V_{REF})	V	2,3

Note 1. Used to define a differential signal slew-rate.
Note 2. For CK - CK# use $V_{IH.CA}$/$V_{IL.CA(AC)}$ of ADD/CMD and V_{REFCA};
Note 3. These values are not defined; however, the differential signals CK - CK#, need to be within the respective limits ($V_{IH.CA(DC)\ max}$, $V_{IL.CA(DC)min}$) for single-ended signals as well as the limitations for overshoot and undershoot.

Table 69. Allowed time before ringback (tDVAC) for CK – CK#

Slew Rate [V/ns]	tDVAC [ps] @ |VIH/Ldiff(AC)| = 200 mV		tDVAC [ps] @ |VIH/Ldiff(AC)| = TBD mV	
	Min.	Max.	Min.	Max.
>4.0	120	-	TBD	-
4.0	115	-	TBD	-
3.0	110	-	TBD	-
2.0	105	-	TBD	-
1.8	100	-	TBD	-
1.6	95	-	TBD	-
1.4	90	-	TBD	-
1.2	85	-	TBD	-
1.0	80	-	TBD	-
<1.0	80	-	TBD	-

Single-ended requirements for differential signals

Each individual component of a differential signal (CK, CK#) has also to comply with certain requirements for single-ended signals.
CK and CK# have to approximately reach V_{SEHmin} / V_{SELmax} (approximately equal to the ac-levels ($V_{IH.CA}$(AC) / $V_{IL.CA}$(AC)) for ADD/CMD signals) in every half-cycle.
Note that the applicable ac-levels for ADD/CMD might be different per speed-bin etc. E.g., if Different value than $V_{IH.CA}$(AC100)/$V_{IL.CA}$(AC100) is used for ADD/CMD signals, then these ac-levels apply also for the single-ended signals CK and CK#.

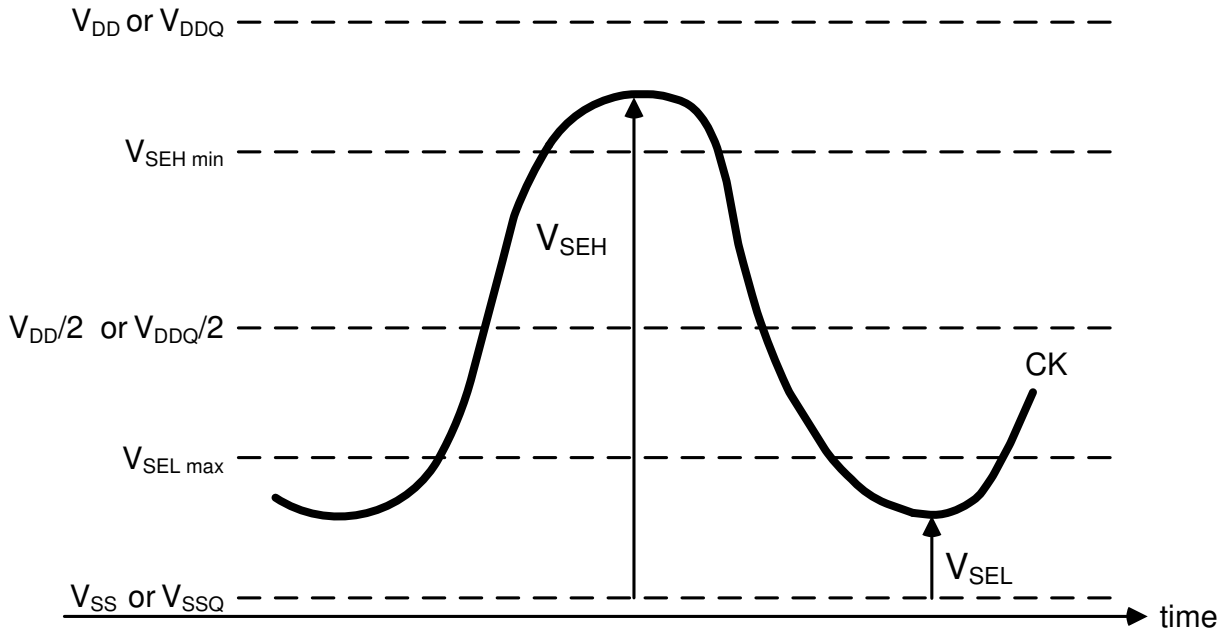

Figure 187. Single-ended requirement for differential signals

Note that, while ADD/CMD signal requirements are with respect to V_{REFCA}, the single-ended components of differential signals have a requirement with respect to V_{DD}/2; this is nominally the same. The transition of single-ended signals through the ac-levels is used to measure setup time. For single-ended components of differential signals the requirement to reach V_{SELmax}, V_{SEHmin} has no bearing on timing, but adds a restriction on the common mode characteristics of these signals.

Table 70. Single-ended levels for CK, CK#

Symbol	Parameter	DDR4-2666		DDR4-3200		Unit	Note
		Min.	Max.	Min.	Max.		
V_{SEH}	Single-ended high-level for CK, CK#	(V_{DD}/2) + 0.095	-	(VDD/2) + 0.085	-	V	1-3
V_{SEL}	Single-ended low-level for CK, CK#	-	(V_{DD}/2) - 0.095	-	(V_{DD}/2) - 0.085	V	1-3

Note 1. For CK – CK# use $V_{IH.CA}$/$V_{IL.CA(AC)}$ of ADD/CMD
Note 2. $V_{IH.CA}$/$V_{IL.CA(AC)}$ for ADD/CMD is based on V_{REFCA}
Note 3. These values are not defined; however, the differential signals CK – CK#, need to be within the respective limits ($V_{IH.CA(DC)\ max}$, $V_{IL.CA(DC)min}$) for single-ended signals as well as the limitations for overshoot and undershoot.

Address, Command and Control Overshoot and Undershoot specifications

Table 71. AC overshoot/undershoot for Address, Command and Control pins

Symbol	Parameter	DDR4-2666/3200	Unit	Note
V_{AOSP}	Maximum peak amplitude above V_{AOS}	0.06	V	
V_{AOS}	Upper boundary of overshoot area A_{AOS1}	V_{DD} + 0.24	V	1
V_{AUS}	Maximum peak amplitude allowed for undershoot	0.30	V	
A_{AOS2}	Maximum overshoot area per 1 t_{CK} above V_{AOS}	0.0055	V-ns	
A_{AOS1}	Maximum overshoot area per 1 t_{CK} between V_{DD} and V_{AOS}	0.1699	V-ns	
A_{AUS}	Maximum undershoot area per 1 t_{CK} below V_{SS}	0.1762	V-ns	
(A0-A13, BG0-BG1, BA0-BA1, ACT#, RAS#/A16, CAS#/A15, WE#/A14, CS#, CKE, ODT)				

Note 1. The value of V_{AOS} matches V_{DD} absolute max as defined in “Absolute Maximum DC Ratings”. Absolute Maximum DC Ratings if V_{DD} equals V_{DD} max as defined in "Recommended DC Operating Conditions”. If V_{DD} is above the recommended operating conditions, V_{AOS} remains at V_{DD} absolute max as defined in “Absolute Maximum DC Ratings”

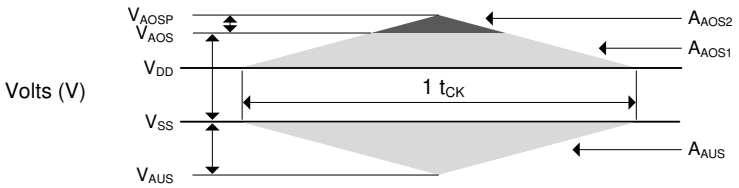

Figure 188. Address, Command and Control Overshoot and Undershoot Definition

Clock Overshoot and Undershoot Specifications

Table 72. AC overshoot/undershoot specification for Clock

Symbol	Parameter	DDR4-2666/3200	Unit	Note
V_{COSP}	Maximum peak amplitude above V_{COS}	0.06	V	
V_{COS}	Upper boundary of overshoot area A_{DOS1}	V_{DD} + 0.24	V	1
V_{CUS}	Maximum peak amplitude allowed for undershoot	0.30	V	
A_{COS2}	Maximum overshoot area per 1 UI above V_{COS}	0.0025	V-ns	
A_{COS1}	Maximum overshoot area per 1 UI between V_{DD} and V_{DOS}	0.0750	V-ns	
A_{CUS}	Maximum undershoot area per 1 UI below V_{SS}	0.0762	V-ns	
(CK, CK#)				

Note 1. The value of V_{COS} matches V_{DD} absolute max as defined in “Absolute Maximum DC Ratings”. Absolute Maximum DC Ratings if V_{DD} equals V_{DD} max as defined in "Recommended DC Operating Conditions”. If V_{DD} is above the recommended operating conditions, V_{COS} remains at V_{DD} absolute max as defined in “Absolute Maximum DC Ratings”

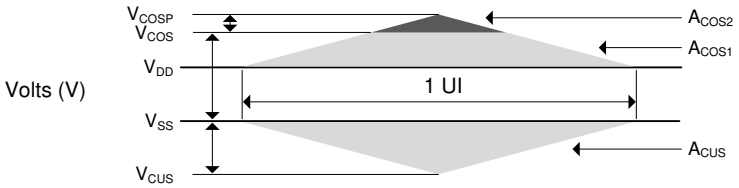

Figure 189. Clock Overshoot and Undershoot Definition

Data, Strobe and Mask Overshoot and Undershoot Specifications

Table 73. AC overshoot/undershoot specification for Data, Strobe and Mask

Symbol	Parameter	DDR4-2666/3200	Unit	Note
V_{DOSP}	Maximum peak amplitude above V_{DOS}	0.16	V	
V_{DOS}	Upper boundary of overshoot area A_{DOS1}	V_{DDQ} + 0.24	V	1
V_{DUS}	Lower boundary of undershoot area A_{DUS1}	0.30	V	2
V_{DUSP}	Maximum peak amplitude below V_{DUS}	0.10	V	
A_{DOS2}	Maximum overshoot area per 1 UI above V_{DOS}	0.0100	V-ns	
A_{DOS1}	Maximum overshoot area per 1 UI between V_{DDQ} and V_{DOS}	0.0700	V-ns	
A_{CUS1}	Maximum undershoot area per 1 UI between V_{SSQ} and V_{DUS1}	0.0700	V-ns	
A_{CUS2}	Maximum undershoot area per 1 UI below V_{DUS}	0.0100	V-ns	
(DQ, DQS, DQS#, DM#, DBI#, TDQS, TDQS#)				

Note 1. The value of V_{DOS} matches (V_{IN}, V_{OUT}) max as defined in “Absolute Maximum DC Ratings”. Absolute Maximum DC Ratings if V_{DDQ} equals V_{DDQ} max as defined in "Recommended DC Operating Conditions”. If V_{DDQ} is above the recommended operating conditions, V_{DOS} remains at (V_{IN}, V_{OUT}) max as defined in “Absolute Maximum DC Ratings”

Note 2. The value of V_{DUS} matches (V_{IN}, V_{OUT}) min as defined in “Absolute Maximum DC Ratings”.

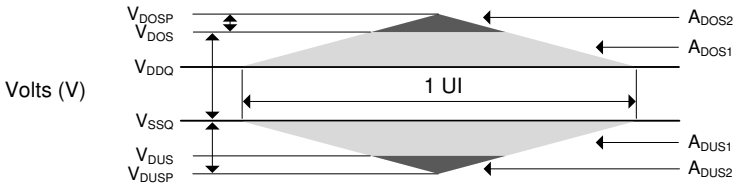

Figure 190. Data, Strobe and Mask Overshoot and Undershoot Definition

Table 74. Capacitance

Symbol	Parameter	DDR4-2666		DDR4-3200		Unit	Note
		Min.	Max.	Min.	Max.		
C_{IO}	Input/output capacitance	0.55	1.15	0.55	1	pF	1,2,3
C_{DIO}	Input/output capacitance delta	-0.1	0.1	-0.1	0.1	pF	1,2,3,11
C_{DDQS}	Input/output capacitance delta DQS and DQS#	-	0.05	-	0.05	pF	1,2,3,5
C_{CK}	Input capacitance, CK and CK#	0.2	0.7	0.2	0.7	pF	1,3
C_{DCK}	Input capacitance delta CK and CK#	-	0.05	-	0.05	pF	1,3,4
C_I	Input capacitance(CTRL, ADD, CMD pins only)	0.2	0.7	0.2	0.55	pF	1,3,6
C_{DI_CTRL}	Input capacitance delta (All CTRL pins only)	-0.1	0.1	-0.1	0.1	pF	1,3,7,8
$C_{DI_ADD_CMD}$	Input capacitance delta (All ADD/CMD pins only)	-0.1	0.1	-0.1	0.1	pF	1,2,9,10
C_{ALERT}	Input/output capacitance of ALERT	0.5	1.5	0.5	1.5	pF	1,3
C_{ZQ}	Input/output capacitance of ZQ	-	2.3	-	2.3	pF	1,3,12

Note 1. This parameter is not subject to production test. It is verified by design and characterization. The silicon only capacitance is validated by deem bedding the package L and C parasitic. The capacitance is measured with V_{DD}, V_{DDQ}, V_{SS}, V_{SSQ} applied with all other signal pins floating. Measurement procedure TBD. Used to define a differential signal slew-rate.
Note 2. DQ, DM#, DQS, DQS#, TDQS, TDQS#. Although the DM, TDQS and TDQS# pins have different functions, the loading matches DQ and DQS.
Note 3. This parameter applies to monolithic devices only; stacked/dual-die devices are not covered here.
Note 4. Absolute value CK-CK#.
Note 5. Absolute value of C_{IO}(DQS) - C_{IO}(DQS#).
Note 6. C_I applies to ODT, CS#, CKE, A0-A16, BA0-BA1, BG0-BG1, RAS#/A16, CAS#/A15, WE#/A14, ACT# and PAR.
Note 7. C_{DI_CTRL} applies to ODT, CS# and CKE.
Note 8. C_{DI_CTRL} = C_I(CTRL) - 0.5 x (C_I(CLK) + C_I(CLK#)).
Note 9. $C_{DI_ADD_CMD}$ applies to, A0-A16, BA0-BA1, BG0, RAS#/A16, CAS#/A15, WE#/A14, ACT# and PAR.
Note 10. $C_{DI_ADD_CMD}$ = C_I(ADD_CMD) - 0.5 x (C_I(CLK) + C_I(CLK#)).
Note 11. C_{DIO} = C_{IO}(DQ,DM) - 0.5 x (C_{IO}(DQS) + C_{IO}(DQS#)).
Note 12. Maximum external load capacitance on ZQ pin: TBD pF.

Table 75. DRAM package electrical specifications

Symbol	Parameter	DDR4-2666		DDR4-3200		Unit	Note
		Min.	Max.	Min.	Max.		
Z_{IO}	IInput/output Zpkg	45	85	45	85	Ω	1,2,4,5,10
T_{dIO}	Input/output Pkg Delay	14	42	14	40	ps	1,3,4,5,10
L_{io}	Input/Output Lpkg	-	3.3	-	3.3	nH	10,11
C_{io}	Input/Output Cpkg	-	0.78	-	0.78	pF	10,12
$Z_{IO\ DQS}$	DQS, DQS# Zpkg	45	85	45	85	Ω	1,2,5,10
$T_{dIO\ DQS}$	DQS, DQS# Pkg Delay	14	42	14	40	ps	1,3,5,10
$L_{io\ DQS}$	DQS Lpkg	-	3.3	-	3.3	nH	10,11
$C_{io\ DQS}$	DQS Cpkg	-	0.78	-	0.78	pF	10,12
$DZ_{DIO\ DQS}$	Delta Zpkg DQS, DQS#	-	10	-	10	Ω	1,2,5,7
$D_{TdDIO\ DQS}$	Delta Delay DQS, DQS#	-	5	-	5	ps	1,3,5,7
$Z_{I\ CTRL}$	Input CTRL pins Zpkg	50	90	50	90	Ω	1,2,5,9,10
T_{dI_CTRL}	Input CTRL pins Pkg Delay	14	42	14	40	ps	1,3,5,9,10
$L_{i\ CTRL}$	Input CTRL Lpkg	-	3.4	-	3.4	nH	10,11
$C_{i\ CTRL}$	Input CTRL Cpkg	-	0.7	-	0.7	pF	10,12
$Z_{IADD\ CMD}$	Input- CMD ADD pins Zpkg	50	90	50	90	Ω	1,2,5,8,10
T_{dIADD_CMD}	Input- CMD ADD pins Pkg Delay	14	45	14	40	ps	1,3,5,8,10
$L_{i\ ADD\ CMD}$	Input CMD ADD Lpkg	-	3.6	-	3.6	nH	10,11
$C_{i\ ADD\ CMD}$	Input CMD ADD Cpkg	-	0.74	-	0.74	pF	10,12
Z_{CK}	CLK# Zpkg	50	90	50	90	Ω	1,2,5,10
Td_{CK}	CLK# Pkg Delay	14	42	14	42	ps	1,3,5,10
$L_{i\ CLK}$	Input CLK Lpkg	-	3.4	-	3.4	nH	10,11
$C_{i\ CLK}$	Input CLK Cpkg	-	0.7	-	0.7	pF	10,12
DZ_{DCK}	Delta Zpkg CLK#	-	10	-	10	Ω	1,2,5,6
D_{TdCK}	Delta Delay CLK#	-	5	-	5	ps	1,3,5,6
Z_{OZQ}	ZQ Zpkg	-	100	-	100	Ω	1,2,5,10
$Td_{O\ ZQ}$	ZQ Delay	20	90	20	90	ps	1,3,5,10
$Z_{O\ ALERT}$	ALERT Zpkg	40	100	40	100	Ω	1,2,5,10
$Td_{O\ ALERT}$	ALERT Delay	20	55	20	55	ps	1,3,5,10

Note 1. This parameter is not subject to production test. It is verified by design and characterization. The package parasitic (L and C) are validated using package only samples. The capacitance is measured with V_{DD}, V_{DDQ}, V_{SS}, V_{SSQ} shorted with all other signal pins floating. The inductance is measured with V_{DD}, V_{DDQ}, V_{SS}, V_{SSQ} shorted and all other signal pins shorted at the die side (not pin). Measurement procedure TBD.

Note 2. Package only impedance (Zpkg) is calculated based on the Lpkg and Cpkg total for a given pin where:

Zpkg (total per pin) = SQRT (Lpkg/Cpkg).

Note 3. Package only delay(Tpkg) is calculated based on Lpkg and Cpkg total for a given pin where:

Tdpkg (total per pin) = SQRT (Lpkg × Cpkg).

Note 4. Z_{IO} and T_{dIO} applies to DQ, DM, TDQS and TDQS#.

Note 5. This parameter applies to monolithic devices only.

Note 6. Absolute value of Z_{CK}-$Z_{CK\#}$ for impedance(Z) or absolute value of Td_{CK}-$Td_{CK\#}$ for delay(Td).

Note 7. Absolute value of Z_{IO}(DQS)-Z_{IO}(DQS#) for impedance(Z) or absolute value of T_{dIO}(DQS)-T_{dIO}(DQS#) for delay(Td).

Note 8. $Z_{IADD\ CMD}$ & T_{dIADD_CMD} applies to A0-A13, ACT#, BA0-BA1, BG0-BG1, RAS#/A16, CAS#/A15, WE#/A14 and PAR.

Note 9. $Z_{I\ CTRL}$ & T_{dI_CTRL} applies to ODT, CS# and CKE.

Note 10. Package implementations shall meet spec if the Zpkg and Pkg Delay fall within the ranges shown, and the maximum Lpkg and Cpkg do not exceed the maximum values shown.

Note 11. It is assumed that Lpkg can be approximated as Lpkg = Zo x Td.

Note 12. It is assumed that Cpkg can be approximated as Cpkg = Td/Zo.

I_{DD} and I_{DDQ} Specification Parameters and Test conditions

In this chapter, I_{DD}, I_{PP} and I_{DDQ} measurement conditions such as test load and patterns are defined and setup and test load for I_{DD}, I_{PP} and I_{DDQ} measurements are also described here.

- I_{DD} currents (such as I_{DD0}, I_{DD0A}, I_{DD1}, I_{DD1A}, I_{DD2N}, I_{DD2NA}, I_{DD2NL}, I_{DD2NT}, I_{DD2P}, I_{DD2Q}, I_{DD3N}, I_{DD3NA}, I_{DD3P}, I_{DD4R}, I_{DD4RA}, I_{DD4W}, I_{DD4WA}, I_{DD5B}, I_{DD5F2}, I_{DD5F4}, I_{DD6N}, I_{DD6E}, I_{DD6R}, I_{DD6A}, I_{DD7} and I_{DD8}) are measured as time-averaged currents with all V_{DD} balls of the DDR4 SDRAM under test tied together. Any I_{PP} or I_{DDQ} current is not included in I_{DD} currents.
- I_{PP} currents have the same definition as I_{DD} except that the current on the V_{PP} supply is measured.
- I_{DDQ} currents (such as I_{DDQ2NT} and I_{DDQ4R}) are measured as time-averaged currents with all V_{DDQ} balls of the DDR4 SDRAM under test tied together. Any I_{DD} current is not included in I_{DDQ} currents.

  Attention: I_{DDQ} values cannot be directly used to calculate IO power of the DDR4 SDRAM. They can be used to support correlation of simulated IO power to actual IO power. In DRAM module application, I_{DDQ} cannot be measured separately since V_{DD} and V_{DDQ} are using one merged-power layer in Module PCB.

For I_{DD}, I_{PP} and I_{DDQ} measurements, the following definitions apply:

- “0” and “LOW” is defined as $V_{IN} \leq V_{ILAC(max)}$.
- “1” and “HIGH” is defined as $V_{IN} \geq V_{IHAC(min)}$.
- “MID-LEVEL” is defined as inputs are $V_{REF} = V_{DD} / 2$.
- Timings used for I_{DD}, I_{PP} and I_{DDQ} Measurement-Loop Patterns are described Timings used for I_{DD}, I_{PP} and I_{DDQ} Measurement-Loop Patterns.
- Basic I_{DD}, I_{PP} and I_{DDQ} Measurement Conditions are described in: Basic I_{DD}, I_{PP} and I_{DDQ} Measurement Conditions.
- Detailed I_{DD}, I_{PP} and I_{DDQ} are described in table: I_{DD0}, I_{DD0A} and I_{PP0} Measurement-Loop Pattern through I_{DD7} Measurement-Loop Pattern.
- I_{DD} Measurements are done after properly initializing the DDR4 SDRAM. This includes but is not limited to setting
  - R_{ON} = RZQ/7 (34 Ohm in MR1);
  - R_{TT_NOM} = RZQ/6 (40 Ohm in MR1);
  - R_{TT_WR} = RZQ/2 (120 Ohm in MR2);
  - R_{TT_PARK} = Disable;
  - Qoff = 0B (Output Buffer enabled) in MR1
  - TDQS disabled in MR1;
  - CRC disabled in MR2;
  - CA parity feature disabled in MR5;
  - Gear down mode disabled in MR3
  - Read/Write DBI disabled in MR5;
  - DM disabled in MR5
- Attention: The I_{DD}, I_{PP} and I_{DDQ} Measurement-Loop Patterns need to be executed at least one time before actual I_{DD} or I_{DDQ} measurement is started.
- Define D = {CS#, ACT#, RAS#, CAS#, WE#}:= {HIGH, LOW, LOW, LOW, LOW}; apply BG/BA changes when directed.
- Define D# = {CS#, ACT#, RAS#, CAS#, WE#}:= {HIGH, HIGH, HIGH, HIGH, HIGH}; apply invert of BG/BA changes when directed above.

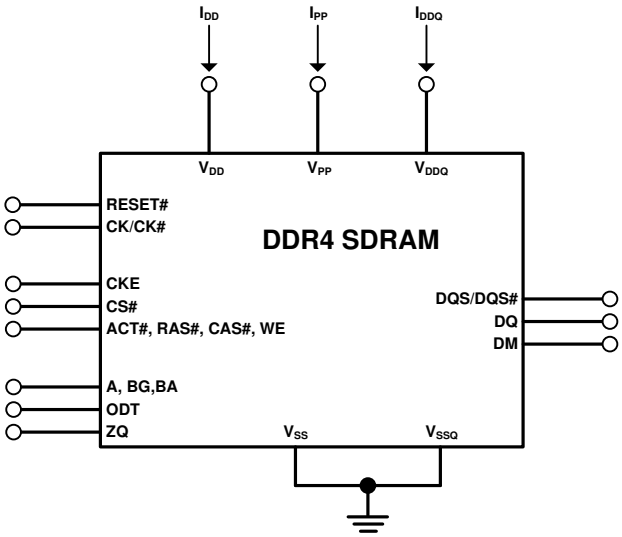

NOTE 1. DIMM level Output test load condition may be different from above.

Figure 191. Measurement Setup and Test Load for IDD, IPP and IDDQ Measurements

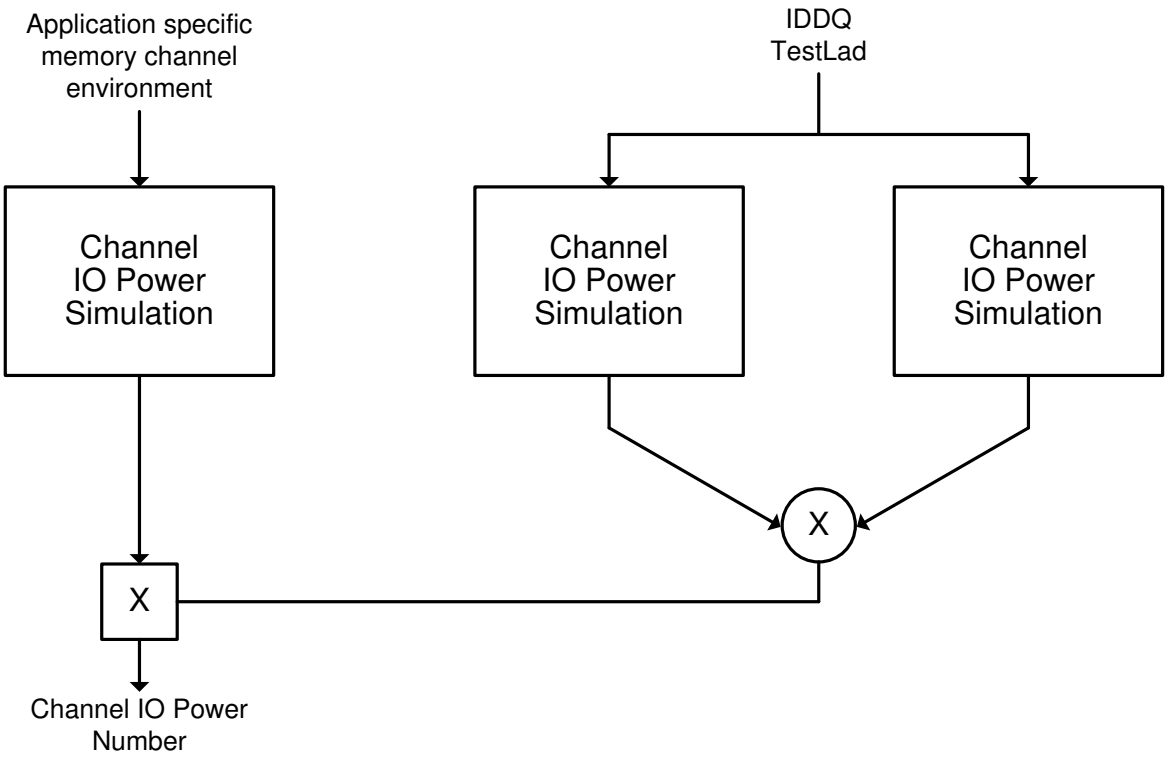

Figure 192. Correlation from simulated Channel IO Power to actual Channel IO Power supported by IDDQ Measurement

Table 76. Timings used for IDD, IPP and IDDQ Measurement

Symbol		DDR4-2666	DDR4-3200	Unit
tCK		0.75	0.625	ns
CL		19	22	nCK
CWL		18	20	nCK
nRCD		19	22	nCK
nRC		62	74	nCK
nRAS		43	52	nCK
nRP		19	22	nCK
nFAW	x4	16	16	nCK
	x8	28	34	nCK
	x16	40	48	nCK
nRRDS	x4	4	4	nCK
	x8	4	4	nCK
	x16	8	9	nCK
nRRDL	x4	7	8	nCK
	x8	7	8	nCK
	x16	9	11	nCK
tCCD_S		4	4	nCK
tCCD_L		7	8	nCK
tWTR_S		4	4	nCK
tWTR_L		10	12	nCK
nRFC 8Gb		467	560	nCK

Table 77. Basic IDD, IPP and IDDQ Measurement Conditions

Symbol	Description
IDD0	**Operating One Bank Active-Precharge Current (AL=0)** CKE: High; External clock: On; tCK, nRC, nRAS, CL: see IDD timing table; BL: 8[1]; AL: 0; CS#: High between ACT and PRE; Command, Address, Bank Group Address, Bank Address Inputs: partially toggling according to IDD Loop table; Data IO: VDDQ; DM#: stable at 1; Bank Activity: Cycling with one bank active at a time: 0,0,1,1,2,2,... (see IDD Loop table); Output Buffer and RTT: Enabled in Mode Registers[2]; ODT Signal: stable at 0; Pattern Details: see IDD Loop table
IDD0A	**Operating One Bank Active-Precharge Current (AL=CL-1)** AL = CL-1, Other conditions: see IDD0
IPP0	**Operating One Bank Active-Precharge IPP Current** Same condition with IDD0
IDD1	**Operating One Bank Active-Read-Precharge Current (AL=0)** CKE: High; External clock: On; tCK, nRC, nRAS, nRCD, CL: see IDD timing table; BL: 8[1]; AL: 0; CS#: High between ACT, RD and PRE; Command, Address, Bank Group Address, Bank Address Inputs, Data IO: partially toggling according to IDD Loop table; DM#: stable at 1; Bank Activity: Cycling with one bank active at a time: 0,0,1,1,2,2,... (see IDD Loop table); Output Buffer and RTT: Enabled in Mode Registers[2]; ODT Signal: stable at 0; Pattern Details: see IDD Loop table
IDD1A	**Operating One Bank Active-Read-Precharge Current (AL=CL-1)** AL = CL-1, Other conditions: see IDD1
IPP1	**Operating One Bank Active-Read-Precharge IPP Current** Same condition with IDD1
IDD2N	**Precharge Standby Current (AL=0)** CKE: High; External clock: On; tCK, CL: see IDD timing table; BL: 8[1]; AL: 0; CS#: stable at 1; Command, Address, Bank Group Address, Bank Address Inputs: partially toggling according to IDD Loop table; Data IO: VDDQ; DM#: stable at 1; Bank Activity: all banks closed; Output Buffer and RTT: Enabled in Mode Registers[2]; ODT Signal: stable at 0; Pattern Details: see IDD Loop table
IDD2NA	**Precharge Standby Current (AL=CL-1)** AL = CL-1, Other conditions: see IDD2N
IPP2N	**Precharge Standby IPP Current** Same condition with IDD2N
IDD2NT	**Precharge Standby ODT Current** CKE: High; External clock: On; tCK, CL: see IDD timing table; BL: 8[1]; AL: 0; CS#: stable at 1; Command, Address, Bank Group Address, Bank Address Inputs: partially toggling according to IDD Loop table; Data IO: VSSQ; DM#: stable at 1; Bank Activity: all banks closed; Output Buffer and RTT: Enabled in Mode Registers[2]; ODT Signal: toggling according to IDD Loop table; Pattern Details: see to IDD Loop table
IDDQ2NT (Optional)	**Precharge Standby ODT IDDQ Current** Same definition like for IDD2NT, however measuring IDDQ current instead of IDD current
IDD2NL	**Precharge Standby Current with CAL enabled** Same definition like for IDD2N, CAL enabled[3]
IDD2NG	**Precharge Standby Current with Gear Down mode enabled** Same definition like for IDD2N, Gear Down mode enabled[3,5]
IDD2ND	**Precharge Standby Current with DLL disabled** Same definition like for IDD2N, DLL disabled[3]
IDD2N_par	**Precharge Standby Current with CA parity enabled** Same definition like for IDD2N, CA parity enabled[3]
IDD2P	**Precharge Power-Down Current** CKE: Low; External clock: On; tCK, CL: see IDD timing table; BL: 8[1]; AL: 0; CS#: stable at 1; Command, Address, Bank Group Address, Bank Address Inputs: stable at 0; Data IO: VDDQ; DM#: stable at 1; Bank Activity: all banks closed; Output Buffer and RTT: Enabled in Mode Registers[2]; ODT Signal: stable at 0
IPP2P	**Precharge Power-Down IPP Current** Same condition with IDD2P
IDD2Q	**Precharge Quiet Standby Current** CKE: High; External clock: On; tCK, CL: see IDD timing table; BL: 8[1]; AL: 0; CS#: stable at 1; Command, Address, Bank Group Address, Bank Address Inputs: stable at 0; Data IO: VDDQ; DM#: stable at 1;Bank Activity: all banks closed; Output Buffer and RTT: Enabled in Mode Registers[2]; ODT Signal: stable at 0
IDD3N	**Active Standby Current** CKE: High; External clock: On; tCK, CL: see IDD timing table; BL: 8[1]; AL: 0; CS#: stable at 1; Command, Address, Bank Group Address, Bank Address Inputs: partially toggling according to IDD Loop table; Data IO: VDDQ; DM#: stable at 1;Bank Activity: all banks open; Output Buffer and RTT: Enabled in Mode Registers[2]; ODT Signal: stable at 0; Pattern Details: see IDD Loop table
IDD3NA	**Active Standby Current (AL=CL-1)** AL = CL-1, Other conditions: see IDD3N
IPP3N	**Active Standby IPP Current** Same condition with IDD3N

IDD3P	**Active Power-Down Current** CKE: Low; External clock: On; tCK, CL: see IDD timing Table; BL: 8[1]; AL: 0; CS#: stable at 1; Command, Address, Bank Group Address, Bank Address Inputs: stable at 0; Data IO: VDDQ; DM#: stable at 1; Bank Activity: all banks open; Output Buffer and RTT: Enabled in Mode Registers[2]; ODT Signal: stable at 0
IPP3P	**Active Power-Down IPP Current** Same condition with IDD3P
IDD4R	**Operating Burst Read Current** CKE: High; External clock: On; tCK, CL: see IDD timing table; BL: 8[2]; AL: 0; CS#: High between RD; Command, Address, Bank Group Address, Bank Address Inputs: partially toggling according to IDD Loop table; Data IO: seamless read data burst with different data between one burst and the next one according to IDD Loop table; DM#: stable at 1; Bank Activity: all banks open, RD commands cycling through banks: 0,0,1,1,2,2,... (see IDD Loop table); Output Buffer and RTT: Enabled in Mode Registers[2]; ODT Signal: stable at 0; Pattern Details: see IDD Loop table
IDD4RA	**Operating Burst Read Current (AL=CL-1)** AL = CL-1, Other conditions: see IDD4R
IDD4RB	**Operating Burst Read Current with Read DBI** Read DBI enabled[3], Other conditions: see IDD4R
IPP4R	**Operating Burst Read IPP Current** Same condition with IDD4R
IDDQ4R (Optional)	**Operating Burst Read IDDQ Current** Same definition like for IDD4R, however measuring IDDQ current instead of IDD current
IDDQ4RB (Optional)	**Operating Burst Read IDDQ Current with Read DBI** Same definition like for IDD4RB, however measuring IDDQ current instead of IDD current
IDD4W	**Operating Burst Write Current** CKE: High; External clock: On; tCK, CL: see IDD timing table; BL: 8[1]; AL: 0; CS#: High between WR; Command, Address, Bank Group Address, Bank Address Inputs: partially toggling according to IDD Loop table; Data IO: seamless write data burst with different data between one burst and the next one according to IDD Loop table; DM#: stable at 1; Bank Activity: all banks open, WR commands cycling through banks: 0,0,1,1,2,2,... (see IDD Loop table); Output Buffer and RTT: Enabled in Mode Registers[2]; ODT Signal: stable at HIGH; Pattern Details: see IDD Loop table
IDD4WA	**Operating Burst Write Current (AL=CL-1)** AL = CL-1, Other conditions: see IDD4W
IDD4WB	**Operating Burst Write Current with Write DBI** Write DBI enabled[3], Other conditions: see IDD4W
IDD4WC	**Operating Burst Write Current with Write CRC** Write CRC enabled[3], Other conditions: see IDD4W
IDD4W_par	**Operating Burst Write Current with CA Parity** CA Parity enabled[3], Other conditions: see IDD4W
IPP4W	**Operating Burst Write IPP Current** Same condition with IDD4W
IDD5B	**Burst Refresh Current (1X REF)** CKE: High; External clock: On; tCK, CL, nRFC: see IDD timing table; BL: 8[1]; AL: 0; CS#: High between REF; Command, Address, Bank Group Address, Bank Address Inputs: partially toggling according to IDD Loop table; Data IO: VDDQ; DM#: stable at 1; Bank Activity: REF command every nRFC (see IDD Loop table); Output Buffer and RTT: Enabled in Mode Registers[2]; ODT Signal: stable at 0; Pattern Details: see IDD Loop table
IPP5B	**Burst Refresh Write IPP Current (1X REF)** Same condition with IDD5B
IDD5F2	**Burst Refresh Current (2X REF)** tRFC=tRFC_x2, Other conditions: see IDD5B
IPP5F2	**Burst Refresh Write IPP Current (2X REF)** Same condition with IDD5F2
IDD5F4	**Burst Refresh Current (4X REF)** tRFC=tRFC_x4, Other conditions: see IDD5B
IPP5F4	**Burst Refresh Write IPP Current (4X REF)** Same condition with IDD5F4
IDD6N	**Self Refresh Current: Normal Temperature Range** T_{CASE}: -40 - 85°C; Low Power Auto Self Refresh (LP ASR) : Normal[4]; CKE: Low; External clock: Off; CK and CK#: LOW; CL: see IDD timing table; BL: 8[1]; AL: 0; CS#, Command, Address, Bank Group Address, Bank Address, Data IO: High; DM#: stable at 1; Bank Activity: Self-Refresh operation; Output Buffer and RTT: Enabled in Mode Registers[2]; ODT Signal: MID-LEVEL
IPP6N	**Self Refresh IPP Current: Normal Temperature Range** Same condition with IDD6N

IDD6E	**Self-Refresh Current: Extended Temperature Range** T_{CASE}: -40 - 95°C; Low Power Auto Self Refresh (LP ASR): Extended[4]; CKE: Low; External clock: Off; CK and CK#: LOW; CL: see IDD timing table; BL: 8[1]; AL: 0; CS#, Command, Address, Bank Group Address, Bank Address, Data IO: High; DM#:stable at 1; Bank Activity: Extended Temperature Self-Refresh operation; Output Buffer and RTT: Enabled in Mode Registers[2]; ODT Signal: MID-LEVEL
IPP6E	**Self Refresh IPP Current: Extended Temperature Range** Same condition with IDD6E
IDD6R	**Self-Refresh Current: Reduced Temperature Range** T_{CASE}: -40 - 45°C; Low Power Auto Self Refresh (LP ASR) : Reduced[4]; CKE: Low; External clock: Off; CK and CK#: LOW; CL: see IDD timing table; BL: 8[1]; AL: 0; CS#, Command, Address, Bank Group Address, Bank Address, Data IO: High; DM#:stable at 1; Bank Activity: Extended Temperature Self-Refresh operation; Output Buffer and RTT: Enabled in Mode Registers[2]; ODT Signal: MID-LEVEL
IPP6R	**Self Refresh IPP Current: Reduced Temperature Range** Same condition with IDD6R
IDD6A	**Auto Self-Refresh Current** T_{CASE}: -40 - 95°C; Low Power Auto Self Refresh (LP ASR) : Auto[4]; CKE: Low; External clock: Off; CK and CK#: LOW; CL: see IDD timing table; BL: 8[1]; AL: 0; CS#, Command, Address, Bank Group Address, Bank Address, Data IO: High; DM#: stable at 1; Bank Activity: Auto Self-Refresh operation; Output Buffer and RTT: Enabled in Mode Registers[2]; ODT Signal: MID-LEVEL
IPP6A	**Auto Self-Refresh IPP Current** Same condition with IDD6A
IDD7	**Operating Bank Interleave Read Current** CKE: High; External clock: On; tCK, nRC, nRAS, nRCD, nRRD, nFAW, CL: see IDD timing table; BL: 8[1]; AL: CL-1; CS#: High between ACT and RDA; Command, Address, Bank Group Address, Bank Address Inputs: partially toggling according to IDD Loop table; Data IO: read data bursts with different data between one burst and the next one according to IDD Loop table; DM#: stable at 1; Bank Activity: two times interleaved cycling through banks (0, 1, ...7) with different addressing, see IDD Loop table; Output Buffer and RTT: Enabled in Mode Registers[2]; ODT Signal: stable at 0; Pattern Details: see IDD Loop table
IPP7	**Operating Bank Interleave Read IPP Current** Same condition with IDD7
IDD8	**Maximum Power Down Current** TBD
IPP8	**Maximum Power Down IPP Current** Same condition with IDD8

Note 1. Burst Length: BL8 fixed by MRS: set MR0 A[1:0] =00.
Note 2. Output Buffer Enable:
- set MR1 A12 = 0: Qoff = Output buffer enabled
- set MR1 A [2:1] = 00: Output Driver Impedance Control = RZQ/7

R_{TT_NOM} enable: set MR1 A [10:8] = 011: R_{TT_NOM} = RZQ/6
R_{TT_WR} enable: set MR2 A [10:9] = 01: R_{TT_WR} = RZQ/2
R_{TT_PARK} disable: set MR5 A [8:6] = 000

Note 3. CAL Enabled: set MR4 A [8:6] = 001: 1600 MT/s, 010: 1866, 2133MT/s, 011: 2400MT/s
Gear Down mode enabled: set MR3 A3 = 1:1/4 Rate
DLL disabled: set MR1 A0 = 0
CA parity enabled: set MR5 A [2:0] = 001:1600, 1866, 2133MT/s, 010:2400MT/s
Read DBI enabled: set MR5 A12 = 1
Write DBI enabled: set: MR5 A11 = 1

Note 4. Low Power Array Self Refresh (LP ASR)
- set MR2 A [7:6] = 00: Normal
- set MR2 A [7:6] = 01: Reduced Temperature range
- set MR2 A [7:6] = 10: Extended Temperature range
- set MR2 A [7:6] = 11:Auto Self Refresh

Note 5. I_{DD2NG} should be measured after sync pulse (NOP) input.
Note 6. AL is not supported for x16 device.

Table 78. IDD0, IDD0A and IPP0 Measurement - Loop Pattern[1]

CK/ CK#	CKE	Sub-Loop	Cycle Number	CMD	CS#	ACT#	RAS#/ A16	CAS#/ A15	WE#/ A14	ODT	BG0-1 [2]	BA0-1	A12 /BC#	A13, A11	A10	A9-A7	A6-A3	A2-A0	Data[3]
Toggling	Static High	0	0	ACT	0	0	0	0	0	0	0	0	0	0	0	0	0	0	-
		0	1-2	D,D	1	0	0	0	0	0	0	0	0	0	0	0	0	0	-
		0	3-4	D#,D#	1	1	1	1	1	0	3[2]	3	0	0	0	7	F	0	-
		0	...	Repeat pattern 1...4 until nRAS - 1; truncate if necessary															
		0	nRAS	PRE	0	1	0	1	0	0	0	0	0	0	0	0	0	0	-
		0	...	Repeat pattern 1...4 until nRC - 1; truncate if necessary															
		1	1×nRC	Repeat sub-loop 0, use BG[1:0]=1, BA[1:0]=1 instead															
		2	2×nRC	Repeat sub-loop 0, use BG[1:0]=0, BA[1:0]=2 instead															
		3	3×nRC	Repeat sub-loop 0, use BG[1:0]=1, BA[1:0]=3 instead															
		4	4×nRC	Repeat sub-loop 0, use BG[1:0]=0, BA[1:0]=1 instead															
		5	5×nRC	Repeat sub-loop 0, use BG[1:0]=1, BA[1:0]=2 instead															
		6	6×nRC	Repeat sub-loop 0, use BG[1:0]=0, BA[1:0]=3 instead															
		7	7×nRC	Repeat sub-loop 0, use BG[1:0]=1, BA[1:0]=0 instead															
		8	8×nRC	Repeat sub-loop 0, use BG[1:0]=2, BA[1:0]=0 instead													For x4 and x8 only		
		9	9×nRC	Repeat sub-loop 0, use BG[1:0]=3, BA[1:0]=1 instead															
		10	10×nRC	Repeat sub-loop 0, use BG[1:0]=2, BA[1:0]=2 instead															
		11	11×nRC	Repeat sub-loop 0, use BG[1:0]=3, BA[1:0]=3 instead															
		12	12×nRC	Repeat sub-loop 0, use BG[1:0]=2, BA[1:0]=1 instead															
		13	13×nRC	Repeat sub-loop 0, use BG[1:0]=3, BA[1:0]=2 instead															
		14	14×nRC	Repeat sub-loop 0, use BG[1:0]=2, BA[1:0]=3 instead															
		15	15×nRC	Repeat sub-loop 0, use BG[1:0]=3, BA[1:0]=0 instead															

Note 1. DQS, DQS# are V_{DDQ}.
Note 2. BG1 is don't care and AL is not supported for x16 device.
Note 3. DQ signals are V_{DDQ}.

Table 79. IDD1, IDD1A and IPP1 Measurement - Loop Pattern[1]

CK/ CK#	CKE	Sub-Loop	Cycle Number	CMD	CS#	ACT#	RAS#/ A16	CAS#/ A15	WE#/ A14	ODT	BG0-1 [2]	BA0-1	A12/ BC#	A13, A11	A10	A9-A7	A6-A3	A2-A0	Data[3]
Toggling	Static High	0	0	ACT	0	0	0	0	0	0	0	0	0	0	0	0	0	0	-
		0	1-2	D,D	1	0	0	0	0	0	0	0	0	0	0	0	0	0	-
		0	3-4	D#,D#	1	1	1	1	1	0	3[2]	3	0	0	0	7	F	0	-
		0	...	Repeat pattern 1...4 until nRCD-AL-1; truncate if necessary															
		0	nRCD-AL	RD	0	1	1	0	1	0	0	0	0	0	0	0	0	0	D0=00, D1=FF D2=FF, D3=00 D4=FF, D5=00 D6=00, D7=FF
		0	...	Repeat pattern 1...4 until nRAS-1; truncate if necessary															
		0	nRAS	PRE	0	1	0	1	0	0	0	0	0	0	0	0	0	0	-
		0	...	Repeat pattern 1...4 until nRC-1; truncate if necessary															
		1	1×nRC+0	ACT	0	0	0	1	1	0	1	1	0	0	0	0	0	0	-
		1	1×nRC+1,2	D,D	1	0	0	0	0	0	0	0	0	0	0	0	0	0	-
		1	1×nRC+3,4	D#,D#	1	1	1	1	1	0	3[2]	3	0	0	0	7	F	0	-
		1	...	Repeat pattern nRC+1...4 until 1×nRC+nRAS-1; truncate if necessary															
		1	1×nRC +nRCD-AL	RD	0	1	1	0	1	0	1	1	0	0	0	0	0	0	D0=FF, D1=00 D2=00, D3=FF D4=00, D5=FF D6=FF, D7=00
		1	...	Repeat pattern 1...4 until nRAS-1; truncate if necessary															
		1	1×nRAS+nRAS	PRE	0	1	0	1	0	0	1	1	0	0	0	0	0	0	-
			...	Repeat nRC+1...4 until 2×nRC-1; truncate if necessary															
		2	2×nRC	Repeat sub-loop 0, use BG[1:0]=0, use BA[1:0]=2 instead															
		3	3×nRC	Repeat sub-loop 1, use BG[1:0]=1, use BA[1:0]=3 instead															
		4	4×nRC	Repeat sub-loop 0, use BG[1:0]=0, use BA[1:0]=1 instead															
		5	5×nRC	Repeat sub-loop 1, use BG[1:0]=1, use BA[1:0]=2 instead															
		6	6×nRC	Repeat sub-loop 0, use BG[1:0]=0, use BA[1:0]=3 instead															
		8	7×nRC	Repeat sub-loop 1, use BG[1:0]=1, use BA[1:0]=0 instead															
		9	9×nRC	Repeat sub-loop 1, use BG[1:0]=2, use BA[1:0]=0 instead													For x4 and x8 only		
		10	10×nRC	Repeat sub-loop 0, use BG[1:0]=3, use BA[1:0]=1 instead															
		11	11×nRC	Repeat sub-loop 1, use BG[1:0]=2, use BA[1:0]=2 instead															
		12	12×nRC	Repeat sub-loop 0, use BG[1:0]=3, use BA[1:0]=3 instead															
		13	13×nRC	Repeat sub-loop 1, use BG[1:0]=2, use BA[1:0]=1 instead															
		14	14×nRC	Repeat sub-loop 0, use BG[1:0]=3, use BA[1:0]=2 instead															
		15	15×nRC	Repeat sub-loop 1, use BG[1:0]=2, use BA[1:0]=3 instead															
		16	16×nRC	Repeat sub-loop 0, use BG[1:0]=3, use BA[1:0]=0 instead															

Note 1. DQS, DQS# are used according to RD Commands, otherwise V_{DDQ}.
Note 2. BG1 is don't care and AL is not supported for x16 device.
Note 3. Burst Sequence driven on each DQ signal by Read Command. Outside burst operation, DQ signals are V_{DDQ}.

Table 80. IDD2N, IDD2NA, IDD2NL, IDD2NG, IDD2ND, IDD2N_par, IPP2, IDD3N, IDD3NA and IDD3P Measurement - Loop Pattern[1]

CK/ CK#	CKE	Sub-Loop	Cycle Number	CMD	CS#	ACT#	RAS#/ A16	CAS#/ A15	WE#/ A14	ODT	BG0-1 [2]	BA0-1	A12 /BC#	A13, A11	A10	A9-A7	A6-A3	A2-A0	Data[3]
Toggling	Static High	0	0	D,D	1	0	0	0	0	0	0	0	0	0	0	0	0	0	0
		0	1	D,D	1	0	0	0	0	0	0	0	0	0	0	0	0	0	0
		0	2	D#,D#	1	1	1	1	1	0	3[2]	3	0	0	0	7	F	0	0
		0	3	D#,D#	1	1	1	1	1	0	3[2]	3	0	0	0	7	F	0	0
		1	4-7	Repeat sub-loop 0, use BG[1:0]=1, BA[1:0]=1 instead															
		2	8-11	Repeat sub-loop 0, use BG[1:0]=0, BA[1:0]=2 instead															
		3	12-15	Repeat sub-loop 0, use BG[1:0]=1, BA[1:0]=3 instead															
		4	16-19	Repeat sub-loop 0, use BG[1:0]=0, BA[1:0]=1 instead															
		5	20-23	Repeat sub-loop 0, use BG[1:0]=1, BA[1:0]=2 instead															
		6	24-27	Repeat sub-loop 0, use BG[1:0]=0, BA[1:0]=3 instead															
		7	28-31	Repeat sub-loop 0, use BG[1:0]=1, BA[1:0]=0 instead															
		8	32-35	Repeat sub-loop 0, use BG[1:0]=2, BA[1:0]=0 instead															
		9	36-39	Repeat sub-loop 0, use BG[1:0]=3, BA[1:0]=1 instead															
		10	40-43	Repeat sub-loop 0, use BG[1:0]=2, BA[1:0]=2 instead															
		11	44-47	Repeat sub-loop 0, use BG[1:0]=3, BA[1:0]=3 instead															
		12	48-51	Repeat sub-loop 0, use BG[1:0]=2, BA[1:0]=1 instead															
		13	52-55	Repeat sub-loop 0, use BG[1:0]=3, BA[1:0]=2 instead															
		14	56-59	Repeat sub-loop 0, use BG[1:0]=2, BA[1:0]=3 instead															
		15	60-63	Repeat sub-loop 0, use BG[1:0]=3, BA[1:0]=0 instead															

Note 1. DQS, DQS# are V_{DDQ}.
Note 2. BG1 is don't care and AL is not supported for x16 device.
Note 3. DQ signals are V_{DDQ}.

Table 81. IDD2NT and IDDQ2NT Measurement - Loop Pattern[1]

CK/ CK#	CKE	Sub-Loop	Cycle Number	CMD	CS#	ACT#	RAS#/ A16	CAS#/ A15	WE#/ A14	ODT	BG0-1 [2]	BA0-1	A12 /BC#	A13, A11	A10	A9-A7	A6-A3	A2-A0	Data[3]
Toggling	Static High	0	0	D,D	1	0	0	0	0	0	0	0	0	0	0	0	0	0	-
		0	1	D,D	1	0	0	0	0	0	0	0	0	0	0	0	0	0	-
		0	2	D#,D#	1	1	1	1	1	0	3[2]	3	0	0	0	7	F	0	-
		0	3	D#,D#	1	1	1	1	1	0	3[2]	3	0	0	0	7	F	0	-
		1	4-7	Repeat Sub-Loop 0, but ODT = 1 and BG[1:0] = 1, BA[1:0] = 1 instead															
		2	8-11	Repeat Sub-Loop 0, but ODT = 0 and BG[1:0] = 0, BA[1:0] = 2 instead															
		3	12-15	Repeat Sub-Loop 0, but ODT = 1 and BG[1:0] = 1, BA[1:0] = 3 instead															
		4	16-19	Repeat Sub-Loop 0, but ODT = 0 and BG[1:0] = 0, BA[1:0] = 1 instead															
		5	20-23	Repeat Sub-Loop 0, but ODT = 1 and BG[1:0] = 1, BA[1:0] = 2 instead															
		6	24-27	Repeat Sub-Loop 0, but ODT = 0 and BG[1:0] = 0, BA[1:0] = 3 instead															
		7	28-31	Repeat Sub-Loop 0, but ODT = 1 and BG[1:0] = 1, BA[1:0] = 0 instead															
		8	32-35	Repeat Sub-Loop 0, but ODT = 0 and BG[1:0] = 2, BA[1:0] = 0 instead													For x4 and x8 only		
		9	36-39	Repeat Sub-Loop 0, but ODT = 1 and BG[1:0] = 3, BA[1:0] = 1 instead															
		10	40-43	Repeat Sub-Loop 0, but ODT = 0 and BG[1:0] = 2, BA[1:0] = 2 instead															
		11	44-47	Repeat Sub-Loop 0, but ODT = 1 and BG[1:0] = 3, BA[1:0] = 3 instead															
		12	48-51	Repeat Sub-Loop 0, but ODT = 0 and BG[1:0] = 2, BA[1:0] = 1 instead															
		13	52-55	Repeat Sub-Loop 0, but ODT = 1 and BG[1:0] = 3, BA[1:0] = 2 instead															
		14	56-59	Repeat Sub-Loop 0, but ODT = 0 and BG[1:0] = 2, BA[1:0] = 3 instead															
		15	60-63	Repeat Sub-Loop 0, but ODT = 1 and BG[1:0] = 3, BA[1:0] = 0 instead															

Note 1. DQS, DQS# are V_{DDQ}.
Note 2. BG1 is don't care and AL is not supported for x16 device.
Note 3. DQ signals are V_{DDQ}.

Table 82. IDD4R, IDDR4RA, IDD4RB and IDDQ4R Measurement - Loop Pattern[1]

CK/ CK#	CKE	Sub-Loop	Cycle Number	CMD	CS#	ACT#	RAS#/ A16	CAS#/ A15	WE#/ A14	ODT	BG0-1 [2]	BA0-1	A12/ BC#	A13, A11	A10	A9-A7	A6-A3	A2-A0	Data[3]
Toggling	Static High	0	0	RD	0	1	1	0	1	0	0	0	0	0	0	0	0	0	D0=00, D1=FF D2=FF, D3=00 D4=FF, D5=00 D6=00, D7=FF
		0	1	D	1	0	0	0	0	0	0	0	0	0	0	0	0	0	-
		0	2-3	D#,D#	1	1	1	1	1	0	3[2]	3	0	0	0	7	F	0	-
		1	4	RD	0	1	1	0	1	0	1	1	0	0	0	7	F	0	D0=FF, D1=00 D2=00, D3=FF D4=00, D5=FF D6=FF, D7=00
		1	5	D	1	0	0	0	0	0	0	0	0	0	0	0	0	0	-
		1	6-7	D#,D#	1	1	1	1	1	0	3[2]	3	0	0	0	7	F	0	-
		2	8-11	Repeat sub-loop 0, use BG[1:0]=0, BA[1:0]=2 instead															
		3	12-15	Repeat sub-loop 1, use BG[1:0]=1, BA[1:0]=3 instead															
		4	16-19	Repeat sub-loop 0, use BG[1:0]=0, BA[1:0]=1 instead															
		5	20-23	Repeat sub-loop 1, use BG[1:0]=1, BA[1:0]=2 instead															
		6	24-27	Repeat sub-loop 0, use BG[1:0]=0, BA[1:0]=3 instead															
		7	28-31	Repeat sub-loop 1, use BG[1:0]=1, BA[1:0]=0 instead															
		8	32-35	Repeat sub-loop 0, use BG[1:0]=2, BA[1:0]=0 instead													For x4 and x8 only		
		9	36-39	Repeat sub-loop 1, use BG[1:0]=3, BA[1:0]=1 instead															
		10	40-43	Repeat sub-loop 0, use BG[1:0]=2, BA[1:0]=2 instead															
		11	44-47	Repeat sub-loop 1, use BG[1:0]=3, BA[1:0]=3 instead															
		12	48-51	Repeat sub-loop 0, use BG[1:0]=2, BA[1:0]=1 instead															
		13	52-55	Repeat sub-loop 1, use BG[1:0]=3, BA[1:0]=2 instead															
		14	56-59	Repeat sub-loop 0, use BG[1:0]=2, BA[1:0]=3 instead															
		15	60-63	Repeat sub-loop 1, use BG[1:0]=3, BA[1:0]=0 instead															

Note 1. DQS, DQS# are used according to RD Commands, otherwise V_{DDQ}.
Note 2. BG1 is don't care and AL is not supported for x16 device.
Note 3. Burst Sequence driven on each DQ signal by Read Command.

Table 83. IDD4W, IDD4WA, IDD4WB and IDD4W_par Measurement - Loop Pattern[1]

CK/ CK#	CKE	Sub-Loop	Cycle Number	CMD	CS#	ACT#	RAS#/ A16	CAS#/ A15	WE#/ A14	ODT	BG0-1 [2]	BA0-1	A12/ BC#	A13, A11	A10	A9-A7	A6-A3	A2-A0	Data[3]
Toggling	Static High	0	0	WR	0	1	1	0	0	1	0	0	0	0	0	0	0	0	D0=00, D1=FF D2=FF, D3=00 D4=FF, D5=00 D6=00, D7=FF
		0	1	D	1	0	0	0	0	1	0	0	0	0	0	0	0	0	-
		0	2-3	D#,D#	1	1	1	1	1	1	3[2]	3	0	0	0	7	F	0	-
		1	4	WR	0	1	1	0	0	1	1	1	0	0	0	7	F	0	D0=FF, D1=00 D2=00, D3=FF D4=00, D5=FF D6=FF, D7=00
		1	5	D	1	0	0	0	0	1	0	0	0	0	0	0	0	0	-
		1	6-7	D#,D#	1	1	1	1	1	1	3[2]	3	0	0	0	7	F	0	-
		2	8-11	Repeat sub-loop 0, use BG[1:0]=0, BA[1:0]=2 instead															
		3	12-15	Repeat sub-loop 1, use BG[1:0]=1, BA[1:0]=3 instead															
		4	16-19	Repeat sub-loop 0, use BG[1:0]=0, BA[1:0]=1 instead															
		5	20-23	Repeat sub-loop 1, use BG[1:0]=1, BA[1:0]=2 instead															
		6	24-27	Repeat sub-loop 0, use BG[1:0]=0, BA[1:0]=3 instead															
		7	28-31	Repeat sub-loop 1, use BG[1:0]=1, BA[1:0]=0 instead															
		8	32-35	Repeat sub-loop 0, use BG[1:0]=2, BA[1:0]=0 instead													For x4 and x8 only		
		9	36-39	Repeat sub-loop 1, use BG[1:0]=3, BA[1:0]=1 instead															
		10	40-43	Repeat sub-loop 0, use BG[1:0]=2, BA[1:0]=2 instead															
		11	44-47	Repeat sub-loop 1, use BG[1:0]=3, BA[1:0]=3 instead															
		12	48-51	Repeat sub-loop 0, use BG[1:0]=2, BA[1:0]=1 instead															
		13	52-55	Repeat sub-loop 1, use BG[1:0]=3, BA[1:0]=2 instead															
		14	56-59	Repeat sub-loop 0, use BG[1:0]=2, BA[1:0]=3 instead															
		15	60-63	Repeat sub-loop 1, use BG[1:0]=3, BA[1:0]=0 instead															

Note 1. DQS, DQS# are used according to WR Commands, otherwise V_{DDQ}.
Note 2. BG1 is don't care and AL is not supported for x16 device.
Note 3. Burst Sequence driven on each DQ signal by Write Command.

Table 84. IDD4WC Measurement - Loop Pattern[1]

CK/ CK#	CKE	Sub-Loop	Cycle Number	CMD	CS#	ACT#	RAS#/ A16	CAS#/ A15	WE#/ A14	ODT	BG0-1 [2]	BA0-1	A12/ BC#	A13, A11	A10	A9-A7	A6-A3	A2-A0	Data[3]
Toggling	Static High	0	0	WR	0	1	1	0	0	1	0	0	0	0	0	0	0	0	D0=00, D1=FF D2=FF, D3=00 D4=FF, D5=00 D6=00, D7=FF D8=CRC
		0	1-2	D,D	1	0	0	0	0	1	0	0	0	0	0	0	0	0	-
		0	3-4	D#,D#	1	1	1	1	1	1	3[2]	3	0	0	0	7	F	0	-
		0	5	WR	0	1	1	0	0	1	1	1	0	0	0	7	F	0	D0=FF, D1=00 D2=00, D3=FF D4=00, D5=FF D6=FF, D7=00 D8=CRC
		0	6-7	D,D	1	0	0	0	0	1	0	0	0	0	0	0	0	0	-
		0	8-9	D#,D#	1	1	1	1	1	1	3[2]	3	0	0	0	7	F	0	-
		2	10-14	Repeat sub-loop 0, use BG[1:0]=0, BA[1:0]=2 instead															
		3	15-19	Repeat sub-loop 1, use BG[1:0]=1, BA[1:0]=3 instead															
		4	20-24	Repeat sub-loop 0, use BG[1:0]=0, BA[1:0]=1 instead															
		5	25-29	Repeat sub-loop 1, use BG[1:0]=1, BA[1:0]=2 instead															
		6	30-34	Repeat sub-loop 0, use BG[1:0]=0, BA[1:0]=3 instead															
		7	35-39	Repeat sub-loop 1, use BG[1:0]=1, BA[1:0]=0 instead															
		8	40-44	Repeat sub-loop 0, use BG[1:0]=2, BA[1:0]=0 instead													For x4 and x8 only		
		9	45-49	Repeat sub-loop 1, use BG[1:0]=3, BA[1:0]=1 instead															
		10	50-54	Repeat sub-loop 0, use BG[1:0]=2, BA[1:0]=2 instead															
		11	55-59	Repeat sub-loop 1, use BG[1:0]=3, BA[1:0]=3 instead															
		12	60-64	Repeat sub-loop 0, use BG[1:0]=2, BA[1:0]=1 instead															
		13	65-69	Repeat sub-loop 1, use BG[1:0]=3, BA[1:0]=2 instead															
		14	70-74	Repeat sub-loop 0, use BG[1:0]=2, BA[1:0]=3 instead															
		15	75-79	Repeat sub-loop 1, use BG[1:0]=3, BA[1:0]=0 instead															

Note 1. DQS, DQS# are V_{DDQ}.
Note 2. BG1 is don't care for x16 device.
Note 3. Burst Sequence driven on each DQ signal by Write Command.

Table 85. IDD5B Measurement - Loop Pattern[1]

CK/ CK#	CKE	Sub-Loop	Cycle Number	CMD	CS#	ACT#	RAS#/ A16	CAS#/ A15	WE#/ A14	ODT	BG0-1 [2]	BA0-1	A12 /BC#	A13, A11	A10	A9-A7	A6-A3	A2-A0	Data[3]
Toggling	Static High	0	0	REF	1	0	0	0	0	0	0	0	0	0	0	0	0	0	-
		1	1	D	1	0	0	0	0	0	0	0	0	0	0	0	0	0	-
		1	2	D	1	0	0	0	0	0	0	0	0	0	0	0	0	0	-
		1	3	D#,D#	1	1	1	1	1	0	3[2]	3	0	0	0	7	F	0	-
		1	4	D#,D#	1	1	1	1	1	0	3[2]	3	0	0	0	7	F	0	-
		1	5-8	Repeat pattern 1...4, use BG[1:0]=1, BA[1:0]=1 instead															
		1	9-12	Repeat pattern 1...4, use BG[1:0]=0, BA[1:0]=2 instead															
		1	13-16	Repeat pattern 1...4, use BG[1:0]=1, BA[1:0]=3 instead															
		1	17-20	Repeat pattern 1...4, use BG[1:0]=0, BA[1:0]=1 instead															
		1	21-24	Repeat pattern 1...4, use BG[1:0]=1, BA[1:0]=2 instead															
		1	25-28	Repeat pattern 1...4, use BG[1:0]=0, BA[1:0]=3 instead															
		1	29-32	Repeat pattern 1...4, use BG[1:0]=1, BA[1:0]=0 instead															
		1	33-36	Repeat pattern 1...4, use BG[1:0]=2, BA[1:0]=0 instead													For x4 and x8 only		
		1	37-40	Repeat pattern 1...4, use BG[1:0]=3, BA[1:0]=1 instead															
		1	41-44	Repeat pattern 1...4, use BG[1:0]=2, BA[1:0]=2 instead															
		1	45-48	Repeat pattern 1...4, use BG[1:0]=3, BA[1:0]=3 instead															
		1	49-52	Repeat pattern 1...4, use BG[1:0]=2, BA[1:0]=1 instead															
		1	53-56	Repeat pattern 1...4, use BG[1:0]=3, BA[1:0]=2 instead															
		1	57-60	Repeat pattern 1...4, use BG[1:0]=2, BA[1:0]=3 instead															
		1	61-64	Repeat pattern 1...4, use BG[1:0]=3, BA[1:0]=0 instead															
		2	65…nRFC-1	Repeat sub-loop 1, Truncate, if necessary															

Note 1. DQS, DQS# are V_{DDQ}.
Note 2. BG1 is don't care for x16 device.
Note 3. DQ signals are V_{DDQ}.

Table 86. IDD7 Measurement - Loop Pattern[1]

CK/ CK#	CKE	Sub-Loop	Cycle Number	CMD	CS#	ACT#	RAS#/ A16	CAS#/ A15	WE#/ A14	ODT	BG0-1 [2]	BA0-1	A12/ BC#	A13, A11	A10	A9-A7	A6-A3	A2-A0	Data[3]
Toggling	Static High	0	0	ACT	0	0	0	0	0	0	0	0	0	0	0	0	0	0	-
		0	1	RDA	0	1	1	0	1	0	0	0	0	0	1	0	0	0	D0=00, D1=FF D2=FF, D3=00 D4=FF, D5=00 D6=00, D7=FF
		0	2	D	1	0	0	0	0	0	0	0	0	0	0	0	0	0	-
		0	3	D#	1	1	1	1	1	0	3[2]	3	0	0	0	7	F	0	-
		0	…	Repeat pattern 2...3, until nRRD - 1, if nRRD > 4. Truncate if necessary															
		1	nRRD	ACT	0	0	0	0	0	0	1	1	0	0	0	0	0	0	
		1	nRRD+1	RDA	0	1	1	0	1	0	1	1	0	0	1	0	0	0	D0=FF, D1=00 D2=00, D3=FF D4=00, D5=FF D6=FF, D7=00
		1	…	Repeat pattern 2...3, until 2×nRRD - 1, if nRRD > 4. Truncate if necessary															
		2	2×nRRD	Repeat Sub-Loop 0, use BG[1:0] = 0, BA[1:0] = 2 instead															
		3	3×nRRD	Repeat Sub-Loop 1, use BG[1:0] = 1, BA[1:0] = 3 instead															
		4	4×nRRD	Repeat pattern 2 ... 3 until nFAW - 1, if nFAW > 4×nRRD. Truncate if necessary															
		5	nFAW	Repeat Sub-Loop 0, use BG[1:0] = 0, BA[1:0] = 1 instead															
		6	nFAW+ nRRD	Repeat Sub-Loop 1, use BG[1:0] = 1, BA[1:0] = 2 instead															
		7	nFAW+ 2×nRRD	Repeat Sub-Loop 0, use BG[1:0] = 0, BA[1:0] = 3 instead															
		8	nFAW+ 3×nRRD	Repeat Sub-Loop 1, use BG[1:0] = 1, BA[1:0] = 0 instead															
		9	nFAW+ 4×nRRD	Repeat Sub-Loop 4															
		10	2×nFAW	Repeat Sub-Loop 0, use BG[1:0] = 2, BA[1:0] = 0 instead													For x4 and x8 only		
		11	2×nFAW+ nRRD	Repeat Sub-Loop 1, use BG[1:0] = 3, BA[1:0] = 1 instead															
		12	2×nFAW+ 2×nRRD	Repeat Sub-Loop 0, use BG[1:0] = 2, BA[1:0] = 2 instead															
		13	2×nFAW+ 3×nRRD	Repeat Sub-Loop 1, use BG[1:0] = 3, BA[1:0] = 3 instead															
		14	2×nFAW+ 4×nRRD	Repeat Sub-Loop 4															
		15	3×nFAW	Repeat Sub-Loop 0, use BG[1:0] = 2, BA[1:0] = 1 instead															
		16	3×nFAW+ nRRD	Repeat Sub-Loop 1, use BG[1:0] = 3, BA[1:0] = 2 instead															
		17	3×nFAW+ 2×nRRD	Repeat Sub-Loop 0, use BG[1:0] = 2, BA[1:0] = 3 instead															
		18	3×nFAW+ 3×nRRD	Repeat Sub-Loop 1, use BG[1:0] = 3, BA[1:0] = 0 instead															
		19	3×nFAW+ 4×nRRD	Repeat Sub-Loop 4															
		20	4×nFAW	Repeat pattern 2 ... 3 until nRC - 1, if nRC > 4×nFAW. Truncate if necessary															

Note 1. DQS, DQS# are V_{DDQ}.
Note 2. BG1 is don't care for x16 device.
Note 3. Burst Sequence driven on each DQ signal by Read Command. Outside burst operation, DQ signals are V_{DDQ}.

Table 87. IDD and IDDQ Specification Parameters and Test conditions

(V_{DD} & V_{DDQ} = +1.2V ±0.06V, T_{OPER})

Parameter	Symbol	DDR4-2666	DDR4-3200	Unit
		Max.	Max.	
Operating One Bank Active-Precharge Current (AL=0)	I_{DD0}	84	99	mA
Operating One Bank Active-Precharge Current (AL=CL-1)	I_{DD0A}	84	99	mA
Operating One Bank Active-Precharge IPP Current	I_{PP0}	3.8	3.8	mA
Operating One Bank Active-Read-Precharge Current (AL=0)	I_{DD1}	102	114	mA
Operating One Bank Active-Read-Precharge Current (AL=CL-1)	I_{DD1A}	106	117	mA
Operating One Bank Active-Read-Precharge IPP Current	I_{PP1}	3.8	3.8	mA
Precharge Standby Current (AL=0)	I_{DD2N}	55	65	mA
Precharge Standby Current (AL=CL-1)	I_{DD2NA}	55	65	mA
Precharge Standby IPP Current	I_{PP2N}	1.3	1.3	mA
Precharge Standby ODT Current	I_{DD2NT}	74	85	mA
Precharge Standby Current with CAL enabled	I_{DD2NL}	36	39	mA
Precharge Standby Current with Gear Down mode enabled	I_{DD2NG}	54	64	mA
Precharge Standby Current with DLL disabled	I_{DD2ND}	60	71	mA
Precharge Standby Current with CA parity enabled	I_{DD2N_par}	62	72	mA
Precharge Power-Down Current CKE	I_{DD2P}	29	29	mA
Precharge Power-Down IPP Current	I_{PP2P}	1.3	1.3	mA
Precharge Quiet Standby Current	I_{DD2Q}	35	37	mA
Active Standby Current	I_{DD3N}	103	114	mA
Active Standby Current (AL=CL-1)	I_{DD3NA}	103	114	mA
Active Standby IPP Current	I_{PP3N}	1.3	1.3	mA
Active Power-Down Current	I_{DD3P}	64	70	mA
Active Power-Down IPP Current	I_{PP3P}	1.3	1.3	mA
Operating Burst Read Current	I_{DD4R}	189	212	mA
Operating Burst Read Current (AL=CL-1)	I_{DD4RA}	200	223	mA
Operating Burst Read Current with Read DBI	I_{DD4RB}	189	214	mA
Operating Burst Read IPP Current	I_{PP4R}	1.3	1.3	mA
Operating Burst Write Current	I_{DD4W}	208	253	mA
Operating Burst Write Current (AL=CL-1)	I_{DD4WA}	217	264	mA

Operating Burst Write Current with Write DBI		I_{DD4WB}	209	255	mA
Operating Burst Write Current with Write CRC		I_{DD4WC}	224	275	mA
Operating Burst Write Current with CA Parity		I_{DD4W_par}	211	250	mA
Operating Burst Write IPP Current		I_{PP4W}	1.3	1.3	mA
Burst Refresh Current (1X REF)		I_{DD5B}	204	204	mA
Burst Refresh Write IPP Current (1X REF)		I_{PP5B}	49	49	mA
Burst Refresh Current (2X REF)		I_{DD5F2}	167	167	mA
Burst Refresh Write IPP Current (2X REF)		I_{PP5F2}	35	35	mA
Burst Refresh Current (4X REF)		I_{DD5F4}	147	147	mA
Burst Refresh Write IPP Current (4X REF)		I_{PP5F4}	30	30	mA
Self Refresh Current: Normal Temperature Range	T_C = -40~85°C	I_{DD6N}	26	26	mA
Self Refresh IPP Current: Normal Temperature Range		I_{PP6N}	3.5	3.5	mA
Self-Refresh Current: Extended Temperature Range)	T_C = -40~95°C	I_{DD6E}	38	38	mA
Self Refresh IPP Current: Extended Temperature Range		I_{PP6E}	6	6	mA
Self-Refresh Current: Reduced Temperature Range	T_C = -40~45°C	I_{DD6R}	18	18	mA
Self Refresh IPP Current: Reduced Temperature Range		I_{PP6R}	2	2	mA
Auto Self-Refresh Current	T_C = -40~85°C	I_{DD6A}	38	38	mA
Auto Self-Refresh IPP Current		I_{PP6A}	6	6	mA
Operating Bank Interleave Read Current		I_{DD7}	212	212	mA
Operating Bank Interleave Read IPP Current		I_{PP7}	26	26	mA
Maximum Power Down Current		I_{DD8}	22	23	mA
Maximum Power Down IPP Current		I_{PP8}	1.3	1.3	mA

Table 88. Timing Parameters (V_{DD} & V_{DDQ} = +1.2V ±0.06V, T_{OPER})

Symbol	Parameter				DDR4-2666		DDR4-3200		Unit
					Min.	Max.	Min.	Max.	
t_{AA}	Internal read command to first data				14.25	18	13.75	18	ns
t_{AA_DBI}	Internal read command to first data with read DBI enabled				$t_{AA(min)}$ + $3t_{CK}$	$t_{AA(max)}$ + $3t_{CK}$	$t_{AA(min)}$ + $4t_{CK}$	$t_{AA(max)}$ + $4t_{CK}$	ns
t_{RCD}	ACT to internal read or write delay time				14.25	-	13.75	-	ns
t_{RP}	PRE command period				14.25	-	13.75	-	ns
t_{RAS}	ACT to PRE command period				32	9 x t_{REFI}	32	9 x t_{REFI}	ns
t_{RC}	ACT to ACT or REF command period				46.25	-	45.75	-	ns
Speed Bins		**CWL**	**Normal**	**Read DBI**	**Min.**	**Max.**	**Min.**	**Max.**	**Unit**
$t_{CK(avg)}$[51]	ACT to ACT or REF command period	9	10	12	1.5	1.6	1.5	1.6	ns
		9,11	11	13	1.25	<1.5	1.25	<1.5	ns
		9,11	12	14	1.25	<1.5	1.25	<1.5	ns
		10,12	13	15	1.071	<1.25	1.071	<1.25	ns
		10,12	14	16	1.071	<1.25	1.071	<1.25	ns
		11,14	15	18	0.937	<1.071	0.937	<1.071	ns
		11,14	16	19	0.937	<1.071	0.937	<1.071	ns
		12,16	17	20	0.833	<0.937	0.833	<0.937	ns
		12,16	18	21	0.833	<0.937	0.833	<0.937	ns
		14,18	19	22	0.75	<0.833	0.75	<0.833	ns
		14,18	20	23	-	-	0.75	<0.833	ns
		16,20	21	25	-	-	0.682	<0.75	ns
		16,20	22	26	-	-	0.625	<0.682	ns
Clock Timing									
$t_{CK\ (DLL_OFF)}$	Minimum Clock Cycle Time (DLL off mode)				8	20	8	20	ns
$t_{CK(avg)}$[35,36]	Average clock period				0.750	<0.833	0.625	<0.682	ns
$t_{CH(avg)}$	Average high pulse width				0.48	0.52	0.48	0.52	t_{CK}
$t_{CL(avg)}$	Average low pulse width				0.48	0.52	0.48	0.52	t_{CK}
$t_{CK(abs)}$	Absolute Clock Period				tCK(avg)min + tJIT(per)min_tot	tCK(avg)max + tJIT(per)max_tot	tCK(avg)min + tJIT(per)min_tot	tCK(avg)max + tJIT(per)max_tot	t_{CK}
$t_{CH(abs)}$[23]	Absolute clock high pulse width				0.45	-	0.45	-	t_{CK}
$t_{CL(abs)}$[24]	Absolute clock low pulse width				0.45	-	0.45	-	t_{CK}
$_{JIT(per)_tot}$[25]	Clock Period Jitter- total				-38	38	-32	32	ps
$_{JIT(per)_dj}$[26]	Clock Period Jitter deterministic				-19	19	-16	16	ps
$t_{JIT(per,lck)}$	Clock Period Jitter during DLL locking period				-30	30	-25	25	ps
$t_{JIT(cc)}$	Cycle to Cycle Period Jitter				-	75	-	62	ps
$t_{JIT(cc,lck)}$	Cycle to Cycle Period Jitter during DLL locking period				-	60	-	50	ps
$t_{ERR(2per)}$	Cumulative error across 2 cycles				-55	55	-46	46	ps
$t_{ERR(3per)}$	Cumulative error across 3 cycles				-66	66	-55	55	ps
$t_{ERR(4per)}$	Cumulative error across 4 cycles				-73	73	-61	61	ps
$t_{ERR(5per)}$	Cumulative error across 5 cycles				-78	78	-65	65	ps
$t_{ERR(6per)}$	Cumulative error across 6 cycles				-83	83	-69	69	ps
$t_{ERR(7per)}$	Cumulative error across 7 cycles				-87	87	-73	73	ps
$t_{ERR(8per)}$	Cumulative error across 8 cycles				-91	91	-76	76	ps
$t_{ERR(9per)}$	Cumulative error across 9 cycles				-94	94	-78	78	ps
$t_{ERR(10per)}$	Cumulative error across 10 cycles				-96	96	-80	80	ps
$t_{ERR(11per)}$	Cumulative error across 11 cycles				-99	99	-83	83	ps
$t_{ERR(12per)}$	Cumulative error across 12 cycles				-101	101	-84	84	ps
$t_{ERR(13per)}$	Cumulative error across 13 cycles				-103	103	-86	86	ps
$t_{ERR(14per)}$	Cumulative error across 14 cycles				-104	104	-87	87	ps
$t_{ERR(15per)}$	Cumulative error across 15 cycles				-106	106	-89	89	ps
$t_{ERR(16per)}$	Cumulative error across 16 cycles				-108	108	-90	90	ps

$t_{ERR(17per)}$	Cumulative error across 17 cycles	-110	110	-92	92	ps
$t_{ERR(18per)}$	Cumulative error across 18 cycles	-112	112	-93	93	ps
$t_{ERR(nper)}$	Cumulative error across n =13, 14 . . . 49, 50 cycles	$t_{ERR(nper)min} = ((1+0.68ln(n)) \times t_{JIT(per)_total\ min})$ $t_{ERR(nper)max} = ((1+0.68ln(n)) \times t_{JIT(per)_total\ max})$				ps
$t_{IS(base)}$	Command and Address setup time to CK, CK# referenced to $V_{IH(AC)}/V_{IL(AC)}$ levels	55	-	40	-	ps
$t_{IS(V_{REF})}$	Command and Address setup time to CK, CK# referenced to V_{REF} levels	145	-	130	-	ps
$t_{IH(base)}$	Command and Address hold time to CK, CK# referenced to $V_{IH(AC)}/V_{IL(AC)}$ levels	80	-	65	-	ps
$t_{IH(V_{REF})}$	Command and Address hold time to CK, CK# referenced to V_{REF} levels	145	-	130	-	ps
t_{IPW}	Control and Address Input pulse width for each input	385	-	340	-	ps
Command and Address Timing						
t_{CCD_L}[34]	CAS# to CAS# command delay for same bank group	max(5nCK, 5ns)	-	max(5nCK, 5ns)	-	t_{CK}
t_{CCD_S}[34]	CAS# to CAS# command delay for different bank group	4	-	4	-	t_{CK}
$t_{RRD_S(1K)}$[34]	Activate to Activate Command delay to different bank group for 1KB page size	max(4nCK, 3ns)	-	max(4nCK, 2.5ns)	-	t_{CK}
$t_{RRD_L(1K)}$[34]	Activate to Activate Command delay to same bank group for 1KB page size	max(4nCK, 4.9ns)	-	max(4nCK, 4.9ns)	-	t_{CK}
t_{FAW_1K}[34]	Four activate window for 1KB page size	max(20nCK ,21ns)	-	max(20nCK ,21ns)	-	ns
t_{WTR_S}[1,2,34]	Delay from start of internal write transaction to internal read command for different bank group	max(2nCK, 2.5ns)	-	max(2nCK, 2.5ns)	-	ns
t_{WTR_L}[1,34]	Delay from start of internal write transaction to internal read command for same bank group	max(4nCK, 7.5ns)	-	max(4nCK, 7.5ns)	-	ns
t_{RTP}[34]	Internal Read Command to Precharge Command delay	max(4nCK, 7.5ns)	-	max(4nCK, 7.5ns)	-	ns
t_{WR}[1]	WRITE recovery time	15	-	15	-	ns
$t_{WR_CRC_DM}$[1,28]	Write recovery time when CRC and DM are enabled	t_{WR} + max(5nCK, 3.75ns)	-	t_{WR} + max(5nCK, 3.75ns)	-	ns
$t_{WTR_S_CRC_DM}$[2,29,34]	delay from start of internal write transaction to internal read command for different bank groups with both CRC and DM enabled	t_{WTR_S} + max(5nCK, 3.75ns)	-	t_{WTR_S} + max(5nCK, 3.75ns)	-	ns
$t_{WTR_L_CRC_DM}$[3,30,34]	delay from start of internal write transaction to internal read command for same bank group with both CRC and DM enabled	t_{WTR_L} +max(5nCK ,3.75ns)	-	t_{WTR_L} +max(5nCK ,3.75ns)	-	ns
t_{DLLK}	DLL locking time	1024	-	1024	-	t_{CK}
t_{MRD}	Mode Register Set command cycle time	8	-	8	-	t_{CK}
t_{MOD}[50]	Mode Register Set command update delay	max(24nCK ,15ns)	-	max(24nCK ,15ns)	-	t_{CK}
t_{MPRR}[33]	Multi-Purpose Register Recovery Time	1	-	1	-	t_{CK}
t_{WR_MPR}	Multi Purpose Register Write Recovery Time	$t_{MOD(min)}$ + AL + PL	-	$t_{MOD(min)}$ + AL + PL	-	t_{CK}
$t_{DAL(min)}$	Auto precharge write recovery + precharge time	Programmed WR + roundup (t_{RP}/ $t_{CK(avg)}$)				t_{CK}
t_{PDA_S}[45,47]	DQ0 driven to 0 setup time to first DQS rising edge	0.5	-	0.5	-	UI
t_{PDA_H}[46,47]	DQ0 driven to 0 hold time from last DQS falling edge	0.5	-	0.5	-	UI
CS# to Command Address Latency						
t_{CAL}	CS# to Command Address Latency	max(3nCK, 3.748ns)	-	max(3nCK, 3.748ns)	-	t_{CK}
t_{MRD_tCAL}	Mode Register Set command cycle time in CAL mode	t_{MOD} + t_{CAL}	-	t_{MOD} + t_{CAL}	-	t_{CK}
t_{MOD_tCAL}	Mode Register Set update delay in CAL mode	t_{MOD} + t_{CAL}	-	t_{MOD} + t_{CAL}	-	t_{CK}
DRAM Data Timing						
t_{DQSQ}[13,18,39,49]	DQS, DQS# to DQ skew, per group, per access	-	0.18	-	0.20	UI
t_{QH}[13,17,18,39,49]	DQ output hold time per group, per access from DQS,DQS#	0.74	-	0.70	-	UI
t_{DVWd}[17,18,39,49]	Data Valid Window per device per UI: (t_{QH} - t_{DQSQ}) of each UI on a given DRAM	0.64	-	0.64	-	UI
t_{DVWp}[17,18,39,49]	Data Valid Window per pin per UI: (t_{QH} - t_{DQSQ}) each UI on a pin of a given DRAM	0.72	-	0.72	-	UI
$t_{LZ(DQ)}$[39]	DQ low impedance time from CK, CK#	-310	170	-250	160	ps
$t_{HZ(DQ)}$[39]	DQ high impedance time from CK, CK#	-	170	-	160	ps
Data Strobe Timing						
t_{RPRE}[39,40, 44]	DQS, DQS# differential Read Preamble (1 clock preamble)	0.9	-	0.9	-	t_{CK}
t_{RPRE2}[39,41,44]	DQS, DQS# differential Read Preamble (2 clock preamble)	1.8	-	1.8	-	t_{CK}
t_{RPST}[39,45]	DQS, DQS# differential Read Postamble	0.33	-	0.33	-	t_{CK}

t_{QSH}[21,39]	DQS, DQS# differential output high time	0.4	-	0.4	-	t_{CK}
t_{QSL}[20,39]	DQS, DQS# differential output low time	0.4	-	0.4	-	t_{CK}
t_{WPRE}[42]	DQS, DQS# differential Write Preamble (1 clock preamble)	0.9	-	0.9	-	t_{CK}
t_{WPRE2}[43]	DQS, DQS# differential Write Preamble (2 clock preamble)	1.8	-	1.8	-	t_{CK}
t_{WPST}	DQS, DQS# differential Write Postamble	0.33	-	0.33	-	t_{CK}
$t_{LZ(DQS)}$[39]	DQS, DQS# low impedance time (Referenced from RL-1)	-310	170	-250	160	ps
$t_{HZ(DQS)}$[39]	DQS, DQS# high impedance time (Referenced from RL+BL/2)	-	170	-	160	ps
t_{DQSL}	DQS, DQS# differential input low pulse width	0.46	0.54	0.46	0.54	t_{CK}
t_{DQSH}	DQS, DQS# differential input high pulse width	0.46	0.54	0.46	0.54	t_{CK}
t_{DQSS}[42]	DQS, DQS# rising edge to CK, CK# rising edge (1 clock preamble)	-0.27	0.27	-0.27	0.27	t_{CK}
t_{DQSS2}[43]	DQS, DQS# rising edge to CK, CK# rising edge (2 clock preamble)	-0.50	0.50	-0.50	0.50	t_{CK}
t_{DSS}	DQS, DQS# falling edge setup time to CK, CK# rising edge	0.18	-	0.18	-	t_{CK}
t_{DSH}	DQS, DQS# falling edge hold time from CK, CK# rising edge	0.18	-	0.18	-	t_{CK}
$t_{DQSCK(DLL\ On)}$ [37,38,39]	DQS, DQS# rising edge output timing location from rising CK, CK# with DLL On mode	-170	170	-160	160	ps
$t_{DQSCKI(DLL\ On)}$ [37,38,39]	DQS, DQS# rising edge output variance window per DRAM	-	270	-	260	ps
Calibration Timing						
t_{ZQinit}	Power-up and Reset calibration time	1024	-	1024	-	t_{CK}
t_{ZQoper}	Normal operation Full calibration time	512	-	512	-	t_{CK}
t_{ZQCS}	Normal operation Short calibration time	128	-	128	-	t_{CK}
Reset/Self Refresh Timing						
t_{XPR}	Exit Reset from CKE HIGH to a valid command	max(5nCK, $t_{RFC(min)}$ + 10ns)	-	max(5nCK, $t_{RFC(min)}$ + 10ns)	-	t_{CK}
t_{XS}	Exit Self Refresh to commands not requiring a locked DLL	$t_{RFC(min)}$ + 10ns	-	$t_{RFC(min)}$ + 10ns	-	t_{CK}
$t_{XS_ABORT(min)}$	SRX to commands not requiring a locked DLL in Self Refresh ABORT	$t_{RFC4(min)}$ + 10ns	-	$t_{RFC4(min)}$ + 10ns	-	t_{CK}
$t_{XS_FAST(min)}$	Exit Self Refresh to ZQCL,ZQCS and MRS (CL, CWL, WR, RTP and Gear Down)	$t_{RFC4(min)}$ + 10ns	-	$t_{RFC4(min)}$ + 10ns	-	t_{CK}
t_{XSDLL}	Exit Self Refresh to commands requiring a locked DLL	$t_{DLLK(min)}$	-	$t_{DLLK(min)}$	-	t_{CK}
t_{CKESR}	Minimum CKE low width for Self refresh entry to exit timing	$t_{CKE(min)}$ + 1nCK	-	$t_{CKE(min)}$ + 1nCK	-	t_{CK}
t_{CKESR_PAR}	Minimum CKE low width for Self refresh entry to exit timing with CA Parity enabled	$t_{CKE(min)}$ + 1nCK + PL	-	$t_{CKE(min)}$ + 1nCK + PL	-	t_{CK}
t_{CKSRE}	Valid Clock Requirement after Self Refresh Entry (SRE) or Power-Down Entry (PDE)	max(5nCK, 10ns)	-	max(5nCK, 10ns)	-	t_{CK}
t_{CKSRE_PAR}	Valid Clock Requirement after Self Refresh Entry (SRE) or Power-Down when CA Parity is enabled	max(5nCK, 10ns) + PL	-	max(5nCK, 10ns) + PL	-	t_{CK}
t_{CKSRX}	Valid Clock Requirement before Self Refresh Exit (SRX) or Power-Down Exit (PDX) or Reset Exit	max(5nCK, 10ns)	-	max(5nCK, 10ns)	-	t_{CK}
Power Down Timing						
t_{XP}	Exit Power Down with DLL on to any valid command; Exit Precharge Power Down with DLL frozen to commands not requiring a locked DLL	max(4nCK, 6ns)	-	max(4nCK, 6ns)	-	t_{CK}
t_{CKE}[31,32]	CKE minimum pulse width	max(3nCK, 5ns)	-	max(3nCK, 5ns)	-	t_{CK}
t_{CPDED}	Command pass disable delay	4	-	4	-	t_{CK}
t_{PD}[6]	Power Down Entry to Exit Timing	$t_{CKE(min)}$	9 x t_{REFI}	$t_{CKE(min)}$	9 x t_{REFI}	t_{CK}
$t_{ACTPDEN}$[7]	Timing of ACT command to Power Down entry	2	-	2	-	t_{CK}
t_{PRPDEN}[7]	Timing of PRE or PREA command to Power Down entry	2	-	2	-	t_{CK}
t_{RDPDEN}	Timing of RD/RDA command to Power Down entry	RL + 4 + 1	-	RL + 4 + 1	-	t_{CK}
t_{WRPDEN}[4]	Timing of WR command to Power Down entry (BL8OTF, BL8MRS, BC4OTF)	WL + 4 + ($t_{WR}/t_{CK(avg)}$)	-	WL + 4 + ($t_{WR}/t_{CK(avg)}$)	-	t_{CK}
$t_{WRAPDEN}$[5]	Timing of WRA command to Power Down entry (BL8OTF, BL8MRS, BC4OTF)	WL + 4 + WR + 1	-	WL + 4 + WR + 1	-	t_{CK}
$t_{WRPBC4DEN}$[4]	Timing of WR command to Power Down entry (BC4MRS)	WL + 2 + ($t_{WR}/t_{CK(avg)}$)	-	WL + 2 + ($t_{WR}/t_{CK(avg)}$)	-	t_{CK}
$t_{WRAPBC4DEN}$[5]	Timing of WRA command to Power Down entry (BC4MRS)	WL + 2 + WR + 1	-	WL + 2 + WR + 1	-	t_{CK}
$t_{REFPDEN}$[7]	Timing of REF command to Power Down entry	2	-	2	-	t_{CK}
$t_{MRSPDEN}$	Timing of MRS command to Power Down entry	$t_{MOD(min)}$	-	$t_{MOD(min)}$	-	t_{CK}

PDA Timing							
t_{MRD_PDA}	Mode Register Set command cycle time in PDA mode		max(16nCK , 10ns)	-	max(16nCK , 10ns)	-	t_{CK}
t_{MOD_PDA}	Mode Register Set command update delay in PDA mode		t_{MOD}		t_{MOD}		t_{CK}
ODT Timing							
t_{AONAS}	Asynchronous R_{TT} turn-on delay (Power-Down with DLL frozen)		1.0	9.0	1.0	9.0	ns
t_{AOFAS}	Asynchronous R_{TT} turn-off delay (Power-Down with DLL frozen)		1.0	9.0	1.0	9.0	ns
t_{ADC}	R_{TT} dynamic change skew		0.28	0.72	0.26	0.74	t_{CK}
Write Leveling Timing							
t_{WLMRD}[12]	First DQS/DQS# rising edge after write leveling mode is programmed		40	-	40	-	t_{CK}
$t_{WLDQSEN}$[12]	DQS/DQS# delay after write leveling mode is programmed		25	-	25	-	t_{CK}
t_{WLS}	Write leveling setup time from rising CK, CK# crossing to rising DQS/DQS# crossing		0.13	-	0.13	-	t_{CK}
t_{WLH}	Write leveling hold time from rising DQS/DQS# crossing to rising CK, CK# crossing		0.13	-	0.13	-	t_{CK}
t_{WLO}	Write leveling output delay		0	9.5	0	9.5	ns
t_{WLOE}	Write leveling output error		0	2	0	2	ns
CA Parity Timing							
$t_{PAR_UNKNOWN}$	Commands not guaranteed to be executed during this time		-	PL	-	PL	t_{CK}
$t_{PAR_ALERT_ON}$	Delay from errant command to ALERT# assertion		-	PL + 6ns	-	PL + 6ns	t_{CK}
$t_{PAR_ALERT_PW}$	Pulse width of ALERT# signal when asserted		80	160	96	192	t_{CK}
$t_{PAR_ALERT_RSP}$	Time from when Alert is asserted till controller must start providing DES commands in Persistent CA parity mode		-	71	-	85	t_{CK}
PL	Parity Latency		5		6		t_{CK}
CRC Error Reporting							
t_{CRC_ALERT}	CRC error to ALERT# latency		3	13	3	13	ns
$t_{CRC_ALERT_PW}$	CRC ALERT# pulse width		6	10	6	10	t_{CK}
Geardown timing							
t_{XPR_GEAR}	Exit Reset from CKE High to a valid MRS Gear Down (T2/ Reset)		t_{XPR}	-	t_{XPR}	-	
t_{XS_GEAR}	CKE High Assert to Gear Down Enable time(T2/CKE)		t_{XS}	-	t_{XS}	-	
t_{SYNC_GEAR}[27]	MRS command to Sync pulse time(T3)		t_{MOD} + 4nCK	-	t_{MOD} + 4nCK	-	
t_{CMD_GEAR}[27]	Sync pulse to First valid command(T4)		t_{MOD}	-	t_{MOD}	-	
t_{GEAR_setup}	Geardown setup time		2	-	2	-	t_{CK}
t_{GEAR_hold}	Geardown hold time		2	-	2	-	t_{CK}
tREFI							
$t_{RFC1\ (min)}$[34]	8Gb		350	-	350	-	ns
$t_{RFC2\ (min)}$[34]	8Gb		260	-	260	-	ns
$t_{RFC4\ (min)}$[34]	8Gb		160	-	160	-	ns
t_{REFI}	Average periodic refresh interval	-40°C ≤ T_{CASE} ≤ 85°C	-	7.8	-	7.8	µs
		85°C ≤ T_{CASE} ≤ 95°C	-	3.9	-	3.9	µs

Note 1. Start of internal write transaction is defined as follows:
- For BL8 (Fixed by MRS and on-the-fly) : Rising clock edge 4 clock cycles after WL.
- For BC4 (on-the-fly) : Rising clock edge 4 clock cycles after WL.
- For BC4 (fixed by MRS) : Rising clock edge 2 clock cycles after WL.

Note 2. A separate timing parameter will cover the delay from write to read when CRC and DM are simultaneously enabled.
Note 3. Commands requiring a locked DLL are: Read (and RAP) and synchronous ODT commands.
Note 4. t_{WR} is defined in ns, for calculation of t_{WRPDEN} it is necessary to round up t_{WR}/t_{CK} to the next integer.
Note 5. WR in clock cycles as programmed in MR0.
Note 6. t_{REFI} depends on T_{OPER}.
Note 7. CKE is allowed to be registered low while operations such as row activation, precharge, autoprecharge or refresh are in progress, but power-down IDD spec will not be applied until finishing those operations.
Note 8. For these parameters, the DDR4 SDRAM device supports t_{nPARAM}[nCK]=RU{t_{PARAM}[ns]/$t_{CK(avg)}$[ns]}, which is in clock cycles assuming all input clock jitter specifications are satisfied.
Note 9. When CRC and DM are both enabled, $t_{WR_CRC_DM}$ is used in place of tWR.
Note 10. When CRC and DM are both enabled $t_{WTR_S_CRC_DM}$ is used in place of t_{WTR_S}.
Note 11. When CRC and DM are both enabled $t_{WTR_L_CRC_DM}$ is used in place of t_{WTR_L}.
Note 12. The max values are system dependent.
Note 13. DQ to DQS total timing per group where the total includes the sum of deterministic and random timing terms for a specified BER. BER spec and measurement method are TBD.
Note 14. The deterministic component of the total timing. Measurement method TBD.
Note 15. DQ to DQ static offset relative to strobe per group. Measurement method TBD.
Note 16. This parameter will be characterized and guaranteed by design.

Note 17. When the device is operated with the input clock jitter, this parameter needs to be derated by the actual $t_{JIT(per)_total}$ of the input clock. (Output deratings are relative to the SDRAM input clock). Example TBD.
Note 18. DRAM DBI mode is off.
Note 19. DRAM DBI mode is enabled.
Note 20. t_{QSL} describes the instantaneous differential output low pulse width on DQS - DQS#, as measured from on falling edge to the next consecutive rising edge.
Note 21. t_{QSH} describes the instantaneous differential output high pulse width on DQS – DQS#, as measured from on falling edge to the next consecutive rising edge.
Note 22. There is no maximum cycle time limit besides the need to satisfy the refresh interval t_{REFI}.
Note 23. $t_{CH(abs)}$ is the absolute instantaneous clock high pulse width, as measured from one rising edge to the following falling edge.
Note 24. $t_{CL(abs)}$ is the absolute instantaneous clock low pulse width, as measured from one falling edge to the following rising edge.
Note 25. Total jitter includes the sum of deterministic and random jitter terms for a specified BER. BER target and measurement method are TBD.
Note 26. The deterministic jitter component out of the total jitter. This parameter is characterized and guaranteed by design.
Note 27. This parameter has to be even number of clocks.
Note 28. When CRC and DM are both enabled, $t_{WR_CRC_DM}$ is used in place of t_{WR}.
Note 29. When CRC and DM are both enabled $t_{WTR_S_CRC_DM}$ is used in place of t_{WTR_S}.
Note 30. When CRC and DM are both enabled $t_{WTR_L_CRC_DM}$ is used in place of t_{WTR_L}.
Note 31. After CKE is registered low, CKE signal level shall be maintained below V_{ILDC} for t_{CKE} specification (low pulse width).
Note 32. After CKE is registered high, CKE signal level shall be maintained above V_{IHDC} for t_{CKE} specification (high pulse width).
Note 33. Defined between end of MPR read burst and MRS which reloads MPR or disables MPR function.
Note 34. Parameters apply from $t_{CK(avg)min}$ to $t_{CK(avg)max}$ at all standard JEDEC clock period values as stated in the Speed-Bin tables.
Note 35. This parameter must keep consistency with Speed-Bin tables.
Note 36. DDR4-1600 AC timing apply if DRAM operates at lower than 1600 MT/s data rate. UI = $t_{CK(avg).min}/2$
Note 37. Applied when DRAM is in DLL ON mode.
Note 38. Assume no jitter on input clock signals to the DRAM.
Note 39. Value is only valid for R_{ONNOM} = 34 ohms.
Note 40. 1t_{CK} toggle mode with setting MR4 A[11] to 0.
Note 41. 2t_{CK} toggle mode with setting MR4 A[11] to 1, which is valid for DDR4-2400/2666/3200 speed grade.
Note 42. 1t_{CK} mode with setting MR4 A[12] to 0.
Note 43. 2t_{CK} mode with setting MR4 A[12] to 1, which is valid for DDR4-2400/2666/3200 speed grade.
Note 44. The maximum read preamble is bounded by $t_{LZ(DQS)min}$ on the left side and $t_{DQSCK(max)}$ on the right side. See Clock to Data Strobe Relationship. Boundary of DQS Low-Z occur one cycle earlier in 2t_{CK} toggle mode which is illustrated in Read Preamble.
Note 45. DQ falling signal middle-point of transferring from High to Low to first rising edge of DQS diff-signal cross-point.
Note 46. Last falling edge of DQS diff-signal cross-point to DQ rising signal middle-point of transferring from Low to High.
Note 47. V_{REFDQ} value must be set to either its midpoint or V_{cent_DQ} (midpoint) in order to capture DQ0 low level for entering PDA mode.
Note 48. The maximum read postamble is bound by $t_{DQSCK(min)}$ plus $t_{QSH(min)}$ on the left side and $t_{HZ(DQS)max}$ on the right side. See Clock to Data Strobe Relationship.
Note 49. Reference level of DQ output signal is specified with a midpoint as a widest part of Output signal eye which should be approximately 0.7 x V_{DDQ} as a center level of the static single-ended output peak-to-peak swing with a driver impedance of 34 ohms and an effective test load of 50 ohms to V_{TT} = V_{DDQ}.
Note 50. For MR7 commands, the minimum delay to a subsequent non-MRS command is 5nCK.
Note 51. All speed bin also supports functional operation at lower frequencies as shown in the table which are not subject to Production Tests but verified by Design/Characterization.

Rounding Algorithms

Software algorithms for calculation of timing parameters are subject to rounding errors from many sources. For example, a system may use a memory clock with a nominal frequency of 933.33... MHz, or a clock period of 1.0714... ns. Similarly, a system with a memory clock frequency of 1066.66... MHz yields mathematically a clock period of 0.9375... ns. In most cases, it is impossible to express all digits after the decimal point exactly, and rounding must be done because the DDR4 SDRAM specification establishes a minimum granularity for timing parameters of 1 ps.

Rules for rounding must be defined to allow optimization of device performance without violating device parameters. These algorithms rely on results that are within correction factors on device testing and specification to avoid losing performance due to rounding errors.

These rules are:

- Clock periods such as tCKAVGmin are defined to 1 ps of accuracy; for example, 0.9375... ns is defined as 937 ps and 1.0714... ns is defined as 1071 ps.
- Using real math, parameters like tAAmin, tRCDmin, etc. which are programmed in systems in numbers of clocks (nCK) but expressed in units of time (in ns) are divided by the clock period (in ns) yielding a unit less ratio, a correction factor of 2.5% is subtracted, then the result is set to the next higher integer number of clocks:

  nCK = ceiling [(parameter_in_ns / application_tCK_in_ns) - 0.025]
- Alternatively, programmers may prefer to use integer math instead of real math by expressing timing in ps, scaling the desired parameter value by 1000, dividing by the application clock period, adding an inverse correction factor of 97.4%, dividing the result by 1000, then truncating down to the next lower integer value:

  nCK = truncate [{(parameter_in_ps x 1000) / (application_tCK_in_ps) + 974} / 1000]
- Either algorithm yields identical results.

The DQ input receiver compliance mask for voltage and timing

The DQ input receiver compliance mask for voltage and timing is shown in the figure below. The receiver mask (Rx Mask) defines area the input signal must not encroach in order for the DRAM input receiver to be expected to be able to successfully capture a valid input signal with BER of 1e-16; any input signal encroaching within the Rx Mask is subject to being invalid data. The Rx Mask is the receiver property for each DQ input pin and it is not the valid data-eye.

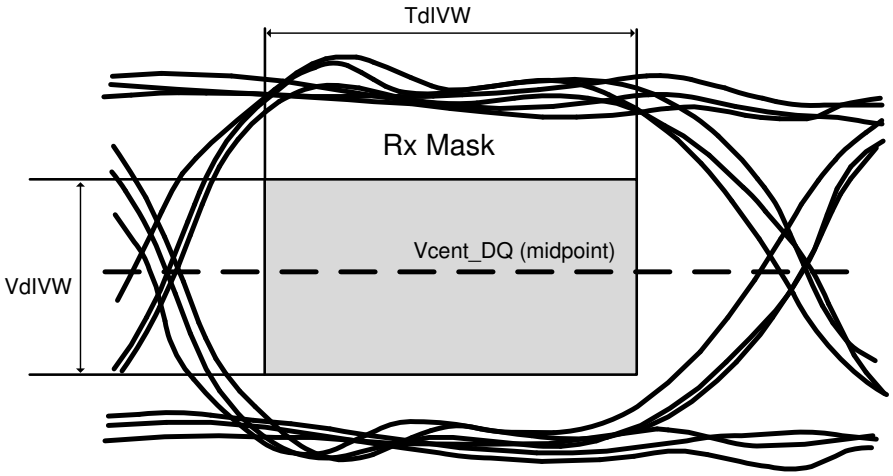

Figure 193. DQ Receiver(Rx) compliance mask

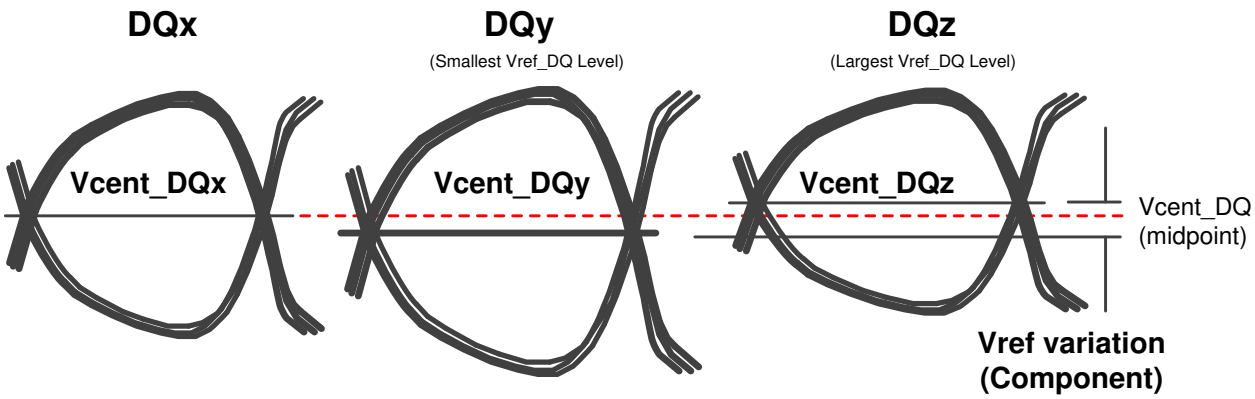

Figure 194. Vcent_DQ Variation to Vcent_DQ(midpoint)

The Vref_DQ voltage is an internal reference voltage level that shall be set to the properly trained setting, which is generally Vcent_DQ(midpoint), in order to have valid Rx Mask values.

Vcent_DQ(midpoint) is defined as the midpoint between the largest Vref_DQ voltage level and the smallest Vref_DQ voltage level across all DQ pins for a given DDR4 DRAM component. Each DQ pin Vref level is defined by the center, i.e. widest opening, of the cumulative data input eye as depicted in Figure. This clarifies that any DDR4 DRAM component level variation must be accounted for within the DDR4 DRAM Rx mask. The component level Vref will be set by the system to account for Ron and ODT settings.

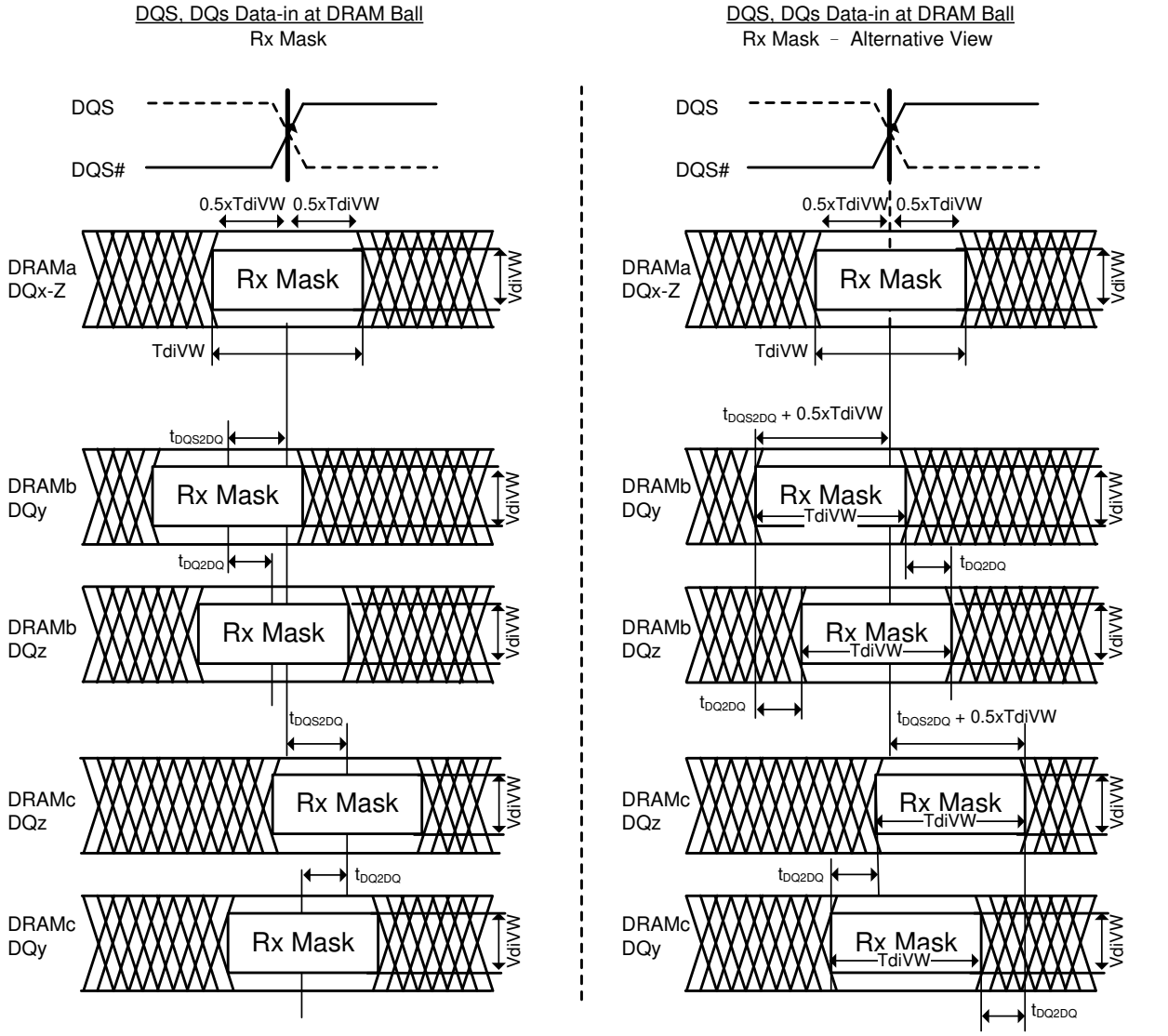

NOTE: DQx represents an optimally centered mask.
DQy represents earliest valid mask.
DQz represents latest valid mask.

NOTE: DRAMa represents a DRAM without any DQS/DQ skews.
DRAMb represents a DRAM with early skews (negative t_{DQS2DQ}).
DRAMc represents a DRAM with delayed skews (positive t_{DQS2DQ}).

NOTE: Figures show skew allowed between DRAM to DRAM and DQ to DQ for a DRAM. Signals assume data centered aligned at DRAM Latch.
TdiPW is not shown; composite data-eyes shown would violate TdiPW.
VCENT DQ (midpoint) is not shown but is assumed to be midpoint of VdiVW.

Figure 195. DQS to DQ and DQ to DQ Timings at DRAM Balls

All of the timing terms in figure are measured at the VdIVW voltage levels centered around Vcent_DQ (midpoint) and are referenced to the DQS/DQS# center aligned to the DQ per pin.

The rising edge slew rates are defined by srr1 and srr2. The slew rate measurement points for a rising edge are shown in the figure below: A low to high transition tr1 is measured from 0.5xVdiVW(max) below Vcent_DQ (midpoint) to the last transition through 0.5xVdiVW(max) above Vcent_DQ(midpoint) while tr2 is measured from the last transition through 0.5xVdiVW(max) above Vcent_DQ(midpoint) to the first transition through the 0.5xVIHL_AC(min) above Vcent_DQ(midpoint).

Rising edge slew rate equations:
srr1 = VdIVW(max) / tr1
srr2 = (VIHL_AC(min) – VdIVW(max)) / (2xtr2)

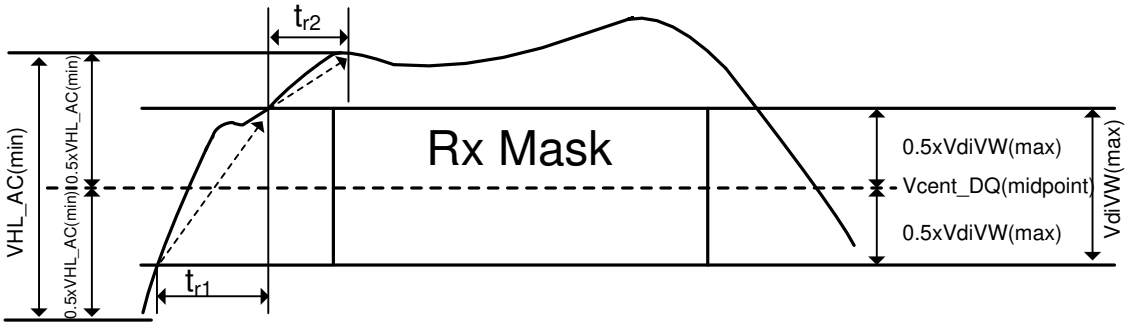

Figure 196. Slew Rate Conditions For Rising Transition

The falling edge slew rates are defined by srf1 and srf2. The slew rate measurement points for a falling edge are shown in the figure below: A high to low transition tf1 is measured from 0.5xVdiVW(max) above Vcent_DQ (midpoint) to the last transition through 0.5xVdiVW(max) below Vcent_DQ(midpoint) while tf2 is measured from the last transition through 0.5xVdiVW(max) below Vcent_DQ(midpoint) to the first transition through the 0.5xVIHL_AC(min) below Vcent_DQ(pin mid).

Falling edge slew rate equations:
srf1 = VdIVW(max) / tf1
srf2 = (VIHL_AC(min) – VdIVW(max)) / (2xtf2)

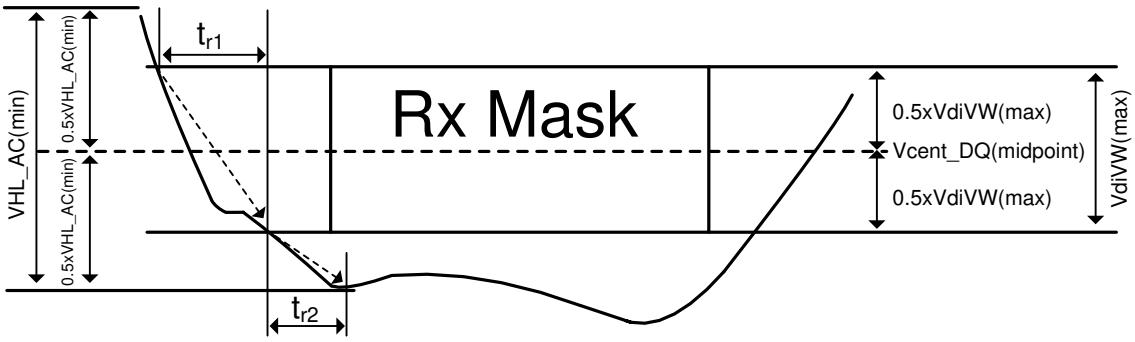

Figure 197. Slew Rate Conditions For Falling Transition

Table 89. DRAM DQs In Receive Mode; * UI=tck(avg)min/2

Symbol	Parameter	DDR4-2666		DDR4-3200		Unit	Note
		Min.	Max.	Min.	Max.		
VdIVW	Rx Mask voltage - pk-pk	-	120	-	110	mV	1,2,10
TdIVW	Rx timing window	-	0.22	-	0.23	UI*	1,2,10
VIHL_AC	DQ AC input swing pk-pk	150	-	140	-	mV	6,10
TdIPW	DQ input pulse width	0.58	-	0.58	-	UI*	5,10
tDQS2DQ	Rx Mask DQS to DQ offset	-0.19	0.19	-0.22	0.22	UI*	6,10
tDQ2DQ	Rx Mask DQ to DQ offset	-	0.105	-	0.125	UI*	7
srr1, srf1	Input Slew Rate over VdIVW if tCK >= 0.937ns	1.0	9	1.0	9	V/ns	8,10
	Input Slew Rate over VdIVW if 0.937ns > tCK >=0.625ns	1.25	9	1.25	9	V/ns	8,10
srr2	Rising Input Slew Rate over 1/2 VIHL_AC	0.2xsrr1	9	0.2xsrr1	9	V/ns	9,10
srf2	Falling Input Slew Rate over 1/2 VIHL_AC	0.2xsrf1	9	0.2xsrf1	9	V/ns	9,10

Note 1. Data Rx mask voltage and timing total input valid window where VdIVW is centered around Vcent_DQ(midpoint) after VrefDQ training is completed. The data Rx mask is applied per bit and should include voltage and temperature drift terms. The input buffer design specification is to achieve at least a BER = 1^{e-16} when the RxMask is not violated. The BER will be characterized and extrapolated if necessary using a dual dirac method from a higher BER(tbd).
Note 2. Defined over the DQ internal Vref range 1.
Note 3. Overshoot and Undershoot Specifications apply.
Note 4. DQ input pulse signal swing into the receiver must meet or exceed VIHL AC(min). VIHL_AC(min) is to be achieved on an UI basis when a rising and falling edge occur in the same UI, i.e., a valid TdiPW.
Note 5. Q minimum input pulse width defined at the Vcent_DQ(midpoint).
Note 6. DQS to DQ offset is skew between DQS and DQs within a word (x8) at the DDR4 SDRAM balls over process, voltage, and temperature.
Note 7. DQ to DQ offset is skew between DQs within a word (x8) at the DDR4 SDRAM balls for a given component over process, voltage, and temperature.
Note 8. Input slew rate over VdIVW Mask centered at Vcent_DQ(midpoint). Slowest DQ slew rate to fastest DQ slew rate per transition edge must be within 1.7 V/ns of each other.
Note 9. Input slew rate between VdIVW Mask edge and VIHL_AC(min) points.
Note 10. All Rx Mask specifications must be satisfied for each UI. For example, if the minimum input pulse width is violated when satisfying TdiVW(min), VdiVW(max), and minimum slew rate limits, then either TdiVW(min) or minimum slew rates would have to be increased to the point where the minimum input pulse width would no longer be violated.

AC and DC output Measurement levels

Output Driver DC Electrical Characteristics

The DDR4 driver supports two different R_{ON} values. These R_{ON} values are referred as strong(low R_{ON}) and weak mode(high R_{ON}). A functional representation of the output buffer is shown in the figure below. Output driver impedance R_{ON} is defined as follows:

The individual pull-up and pull-down resistors (R_{ONPu} and R_{ONPd}) are defined as follows:

$$R_{ONPu} = \frac{V_{DDQ} - Vout}{|Iout|}$$ under the condition that R_{ONPd} is off

$$R_{ONPd} = \frac{Vout}{|Iout|}$$ under the condition that R_{ONPu} is off

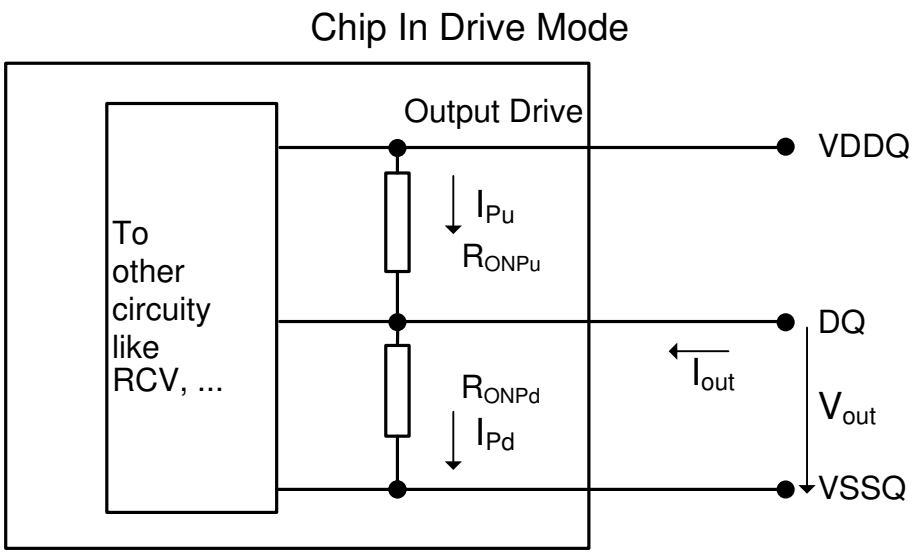

Figure 198. Output driver

Table 90. Output Driver DC Electrical Characteristics, assuming RZQ = 240ohm; entire operating temperature range; after proper ZQ calibration

R_{ON_NOM}	Resistor	Vout	Min.	Nom.	Max.	Unit	Note
34Ω	R_{ON}34Pd	V_{OL}dc= 0.5 x V_{DDQ}	0.8	1	1.1	RZQ/7	1,2
		V_{OM}dc= 0.8 x V_{DDQ}	0.9	1	1.1	RZQ/7	1,2
		V_{OH}dc= 1.1 x V_{DDQ}	0.9	1	1.25	RZQ/7	1,2
	R_{ON}34Pu	V_{OL}dc= 0.5 x V_{DDQ}	0.9	1	1.25	RZQ/7	1,2
		V_{OM}dc= 0.8 x V_{DDQ}	0.9	1	1.1	RZQ/7	1,2
		V_{OH}dc= 1.1 x V_{DDQ}	0.8	1	1.1	RZQ/7	1,2
48Ω	R_{ON}48Pd	V_{OL}dc= 0.5 x V_{DDQ}	0.8	1	1.1	RZQ/5	1,2
		V_{OM}dc= 0.8 x V_{DDQ}	0.9	1	1.1	RZQ/5	1,2
		V_{OH}dc= 1.1 x V_{DDQ}	0.9	1	1.25	RZQ/5	1,2
	R_{ON}48Pu	V_{OL}dc= 0.5 x V_{DDQ}	0.9	1	1.25	RZQ/5	1,2
		V_{OM}dc= 0.8 x V_{DDQ}	0.9	1	1.1	RZQ/5	1,2
		V_{OH}dc= 1.1 x V_{DDQ}	0.8	1	1.1	RZQ/5	1,2
Mismatch between pull-up and pull-down, MMPuPd		V_{OM}dc= 0.8 x V_{DDQ}	-10	-	17	%	1,2,3,4
Mismatch DQ-DQ within byte variation pull-up, MMPudd		V_{OM}dc= 0.8 x V_{DDQ}	-	-	10	%	1,2,4
Mismatch DQ-DQ within byte variation pull-dn, MMPddd		V_{OM}dc= 0.8 x V_{DDQ}	-	-	10	%	1,2,4

Note 11. The tolerance limits are specified after calibration with stable voltage and temperature. For the behavior of the tolerance limits if temperature or voltage changes after calibration, see following section on voltage and temperature sensitivity (TBD).

Note 12. Pull-up and pull-dn output driver impedances are recommended to be calibrated at 0.8 x V_{DDQ}. Other calibration schemes may be used to achieve the linearity spec shown above, e.g. calibration at 0.5 x V_{DDQ} and 1.1 x V_{DDQ}.

Note 13. Measurement definition for mismatch between pull-up and pull-down, MMPuPd: Measure R_{ON}Pu and R_{ON}Pd both at 0.8 x V_{DDQ} separately; R_{ON_NOM} is the nominal R_{ON} value.

$$MMPuPd = \frac{R_{ON}Pu - R_{ON}Pd}{R_{TTNOM}} \times 100$$

Note 14. R_{ON} variance range ratio to R_{ON} Nominal value in a given component, including DQS and DQS#.

$$MMPudd = \frac{R_{ON}PuMax - R_{ON}PdMin}{R_{TTNOM}} \times 100$$

$$MMPddd = \frac{R_{ON}PdMax - R_{ON}PdMin}{R_{TTNOM}} \times 100$$

Note 15. This parameter of x16 device is specified for Upper byte and Lower byte.

ALERT# output Drive Characteristic

A functional representation of the output buffer is shown in the figure below. Output driver impedance R_{ON} is defined as follows:

$$R_{ONPd} = \frac{Vout}{|Iout|}$$ under the condition that R_{ONPu} is off

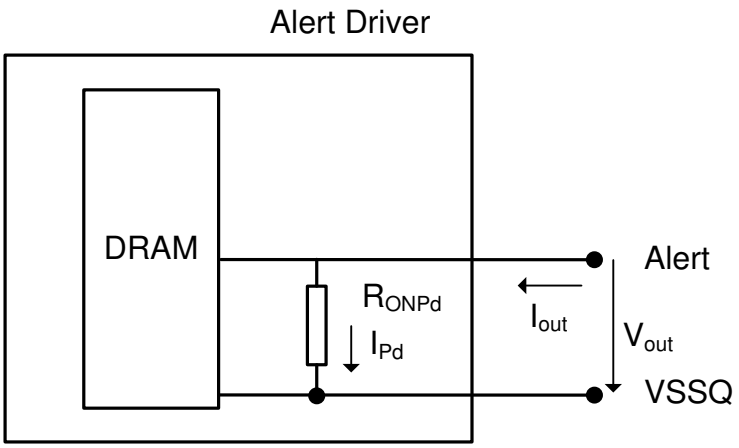

Figure 199. ALERT# output Drive Characteristic

Table 91. ALERT Driver Voltage

Resistor	Vout	Min.	Max.	Unit	Note
R_{ONPd}	$V_{OL}dc$= 0.1 x V_{DDQ}	0.3	1.2	34Ω	1
	$V_{OM}dc$= 0.8 x V_{DDQ}	0.4	1.2	34Ω	1
	$V_{OH}dc$= 1.1 x V_{DDQ}	0.4	1.4	34Ω	1

Note 1. V_{DDQ} voltage is at V_{DDQ} DC. V_{DDQ} DC definition is TBD.

Single-ended AC & DC Output Levels

Table 92. Single-ended AC & DC output levels

Symbol	Parameter	DDR4-2666/3200	Unit	Note
$V_{OH(DC)}$	DC output high measurement level (for IV curve linearity)	1.1 x V_{DDQ}	V	
$V_{OM(DC)}$	DC output mid measurement level (for IV curve linearity	0.8 x V_{DDQ}	V	
$V_{OL(DC)}$	DC output low measurement level (for IV curve linearity)	0.5 x V_{DDQ}	V	
$V_{OH(AC)}$	AC output high measurement level (for output SR)	(0.7 + 0.15) x V_{DDQ}	V	1
$V_{OL(AC)}$	AC output low measurement level (for output SR)	(0.7 - 0.15) x V_{DDQ}	V	1

Note 1. The swing of ±0.15 × V_{DDQ} is based on approximately 50% of the static single-ended output peak-to-peak swing with a driver impedance of RZQ/7Ω and an effective test load of 50Ω to V_{TT} = V_{DDQ}.

Differential AC & DC Output Levels

Table 93. Differential AC & DC output levels

Symbol	Parameter	DDR4-2666/3200	Unit	Note
VOHdiff(AC)	AC differential output high measurement level (for output SR)	+0.3 x V_{DDQ}	V	1
VOLdiff(AC)	AC differential output low measurement level (for output SR)	-0.3 x V_{DDQ}	V	1

Note 1. The swing of ±0.3 × V_{DDQ} is based on approximately 50% of the static differential output peak-to-peak swing with a driver impedance of RZQ/7Ω and an effective test load of 50Ω to V_{TT} = V_{DDQ} at each of the differential outputs.

Single-ended Output Slew Rate

With the reference load for timing measurements, output slew rate for falling and rising edges is defined and measured between $V_{OL(AC)}$ and $V_{OH(AC)}$ for single ended signals.

Table 94. Single-ended output slew rate definition

Description	Measured		Defined by
	From	To	
Single ended output slew rate for rising edge	$V_{OL(AC)}$	$V_{OH(AC)}$	$[V_{OH(AC)}-V_{OL(AC)}]$ / Delta TRse
Single ended output slew rate for falling edge	$V_{OH(AC)}$	$V_{OL(AC)}$	$[V_{OH(AC)}-V_{OL(AC)}]$ / Delta TFse

Note 1. Output slew rate is verified by design and characterization, and may not be subject to production test.

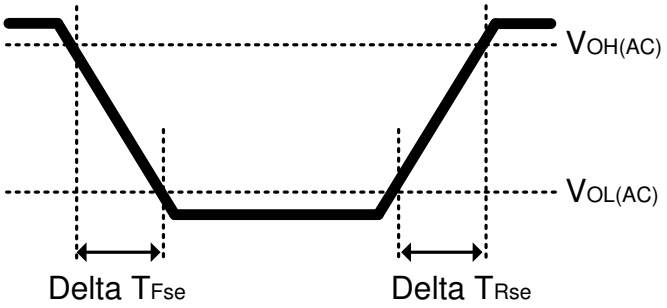

Figure 200. Single-ended Output Slew Rate Definition

Table 95. Single-ended output slew rate

Symbol	Parameter	DDR4-2666/3200		Unit
		Min.	Max.	
SRQse	Single ended output slew rate	4	9	V/ns

Description:
SR: Slew Rate
Q: Query Output (like in DQ, which stands for Data-in, Query-Output)
se: Single-ended Signals
For R_{ON} = RZQ/7 setting

Note 1. In two cases, a maximum slew rate of 12 V/ns applies for a single DQ signal within a byte lane.
- **Case 1** is defined for a single DQ signal within a byte lane which is switching into a certain direction (either from high to low or low to high) while all remaining DQ signals in the same byte lane are static (i.e. they stay at either high or low).
- **Case 2** is defined for a single DQ signal within a byte lane which is switching into a certain direction (either from high to low or low to high) while all remaining DQ signals in the same byte lane are switching into the opposite direction (i.e. from low to high or high to low respectively). For the remaining DQ signal switching into the opposite direction, the regular maximum limit of 9 V/ns applies.

Differential Output Slew Rate

With the reference load for timing measurements, output slew rate for falling and rising edges is defined and measured between $V_{OLdiff(AC)}$ and $V_{OHdiff(AC)}$ for differential signals.

Table 96. Differential output slew rate definition

Description	Measured		Defined by
	From	To	
Differential output slew rate for rising edge	$V_{OLdiff(AC)}$	$V_{OHdiff(AC)}$	[$V_{OHdiff(AC)}$-$V_{OLdiff(AC)}$] / Delta TRdiff
Differential output slew rate for falling edge	$V_{OHdiff(AC)}$	$V_{OLdiff(AC)}$	[$V_{OHdiff(AC)}$-$V_{OLdiff(AC)}$] / Delta TFdiff

Note 1. Output slew rate is verified by design and characterization, and may not be subject to production test.

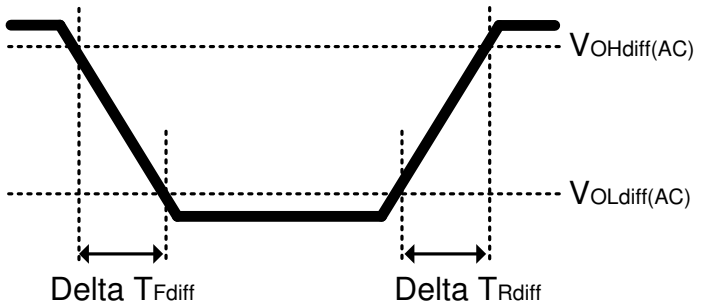

Figure 201. Differential Output Slew Rate Definition

Table 97. Differential output slew rate

Symbol	Parameter	DDR4-2666/3200		Unit
		Min.	Max.	
SRQdiff	Differential output slew rate	8	18	V/ns

Description:
SR: Slew Rate
Q: Query Output (like in DQ, which stands for Data-in, Query-Output)
diff: Differential Signals
For Ron = RZQ/7 setting

Slew Rate Definitions

Slew Rate Definitions for Differential Input Signals (CK)

Table 98. Differential Input Slew Rate Definition

Description	Measured		Defined by
	From	To	
Differential input slew rate for rising edge (CK - CK#)	$V_{ILdiffmax}$	$V_{IHdiffmin}$	$[V_{IHdiffmin} – V_{ILdiffmax}]$ / DeltaTRdiff
Differential input slew rate for falling edge (CK - CK#)	$V_{IHdiffmin}$	$V_{ILdiffmax}$	$[V_{IHdiffmin} – V_{ILdiffmax}]$ / DeltaTFdiff

Note 1. The differential signal (i,e., CK - CK#) must be linear between these thresholds.

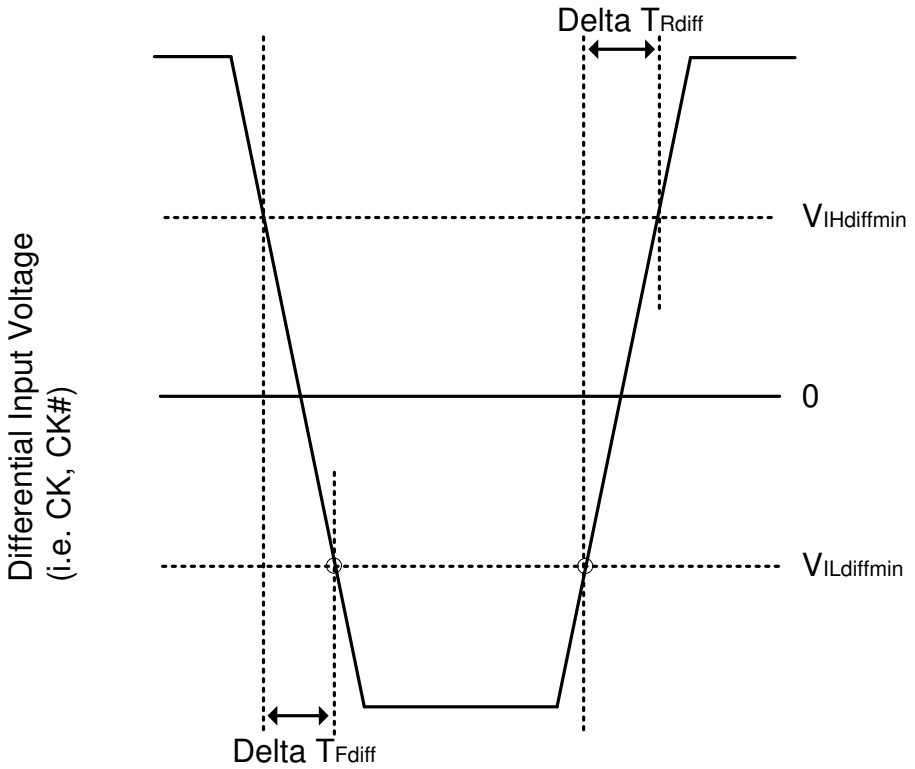

Figure 202. Differential Input Slew Rate Definition for CK, CK#

Slew Rate Definition for Single-ended Input Signals (CMD/ADD)

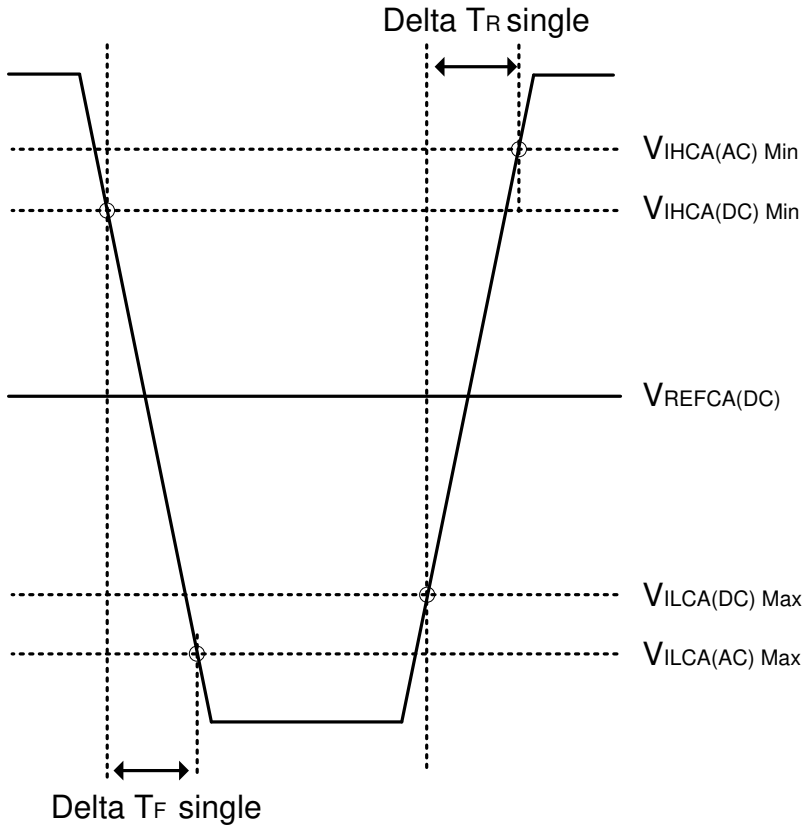

NOTE 1. Single-ended input slew rate for rising edge = { $V_{IHCA(AC)Min}$ - $V_{ILCA(DC)Max}$ } / Delta T_R single.
NOTE 2. Single-ended input slew rate for falling edge = { $V_{IHCA(DC)Min}$ - $V_{ILCA(AC)Max}$ } / Delta T_F single.
NOTE 3. Single-ended signal rising edge from $V_{ILCA(DC)Max}$ to $V_{IHCA(DC)Min}$ must be monotonic slope.
NOTE 4. Single-ended signal falling edge from $V_{IHCA(DC)Min}$ to $V_{ILCA(DC)Max}$ must be monotonic slope.

Figure 203. Single-ended Input Slew Rate definition for CMD and ADD

Differential Input Cross Point Voltage

To guarantee tight setup and hold times as well as output skew parameters with respect to clock, each cross point voltage of differential input signals (CK, CK#) must meet the requirements in Table. The differential input cross point voltage V_{IX} is measured from the actual cross point of true and complement signals to the midlevel between of V_{DD} and V_{SS}.

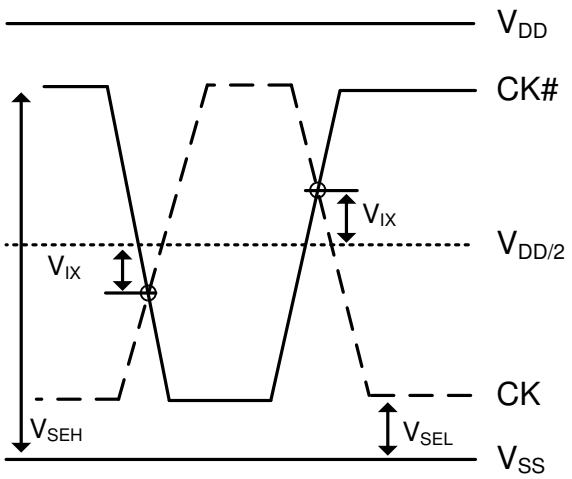

Figure 204. Vix Definition (CK)

Table 99. Cross point voltage for differential input signals (CK)

Symbol	Parameter	DDR4-2666/3200			
		Min.		Max.	
-	Area of V_{SEH}, V_{SEL}	V_{SEL} < V_{DD}/2 - 145 mV	VDD/2 - 145 mV ≦ V_{SEL} ≦ V_{DD}/2 - 100 mV	V_{DD}/2 + 100 mV ≦ V_{SEH} ≦ V_{DD}/2 + 145 mV	V_{DD}/2 + 145 mV < V_{SEH}
V_{IX} (CK)	Differential Input Cross Point Voltage relative to V_{DD}/2 for CK, CK#	-110 mV	- (V_{DD}/2 - V_{SEL}) + 30 mV	(V_{SEH} - V_{DD}/2) - 30 mV	110 mV

CMOS rail to rail Input Levels for RESET#

Table 100. CMOS rail to rail Input Levels for RESET#

Symbol	Parameter	Min.	Max.	Unit	Note
$V_{IH(AC)}$_RESET	AC Input High Voltage	0.8 x V_{DDQ}	V_{DD}	V	6
$V_{IH(DC)}$_RESET	DC Input High Voltage	0.7 x V_{DDQ}	V_{DD}	V	2
$V_{IL(DC)}$_RESET	DC Input Low Voltage	V_{SS}	0.3 x V_{DDQ}	V	1
$V_{IL(AC)}$_RESET	AC Input Low Voltage	V_{SS}	0.2 x V_{DDQ}	V	7
TR_RESET	Rising time	-	1.0	µs	4
t_{PW}_RESET	RESET pulse width	1.0	-	µs	3,5

Note 1. After RESET# is registered Low, RESET# level shall be maintained below $V_{IL(DC)}$_RESET during t_{PW}_RESET, otherwise, SDRAM may not be reset.
Note 2. Once RESET# is registered High, RESET# level must be maintained above $V_{IH(DC)}$_RESET, otherwise, SDRAM operation will not be guaranteed until it is reset asserting RESET# signal Low.
Note 3. RESET is destructive to data contents.
Note 4. No slope reversal (ringback) requirement during its level transition from Low to High.
Note 5. This definition is applied only “Reset Procedure at Power Stable”.
Note 6. Overshoot might occur. It should be limited by the Absolute Maximum DC Ratings.
Note 7. Undershoot might occur. It should be limited by Absolute Maximum DC Ratings

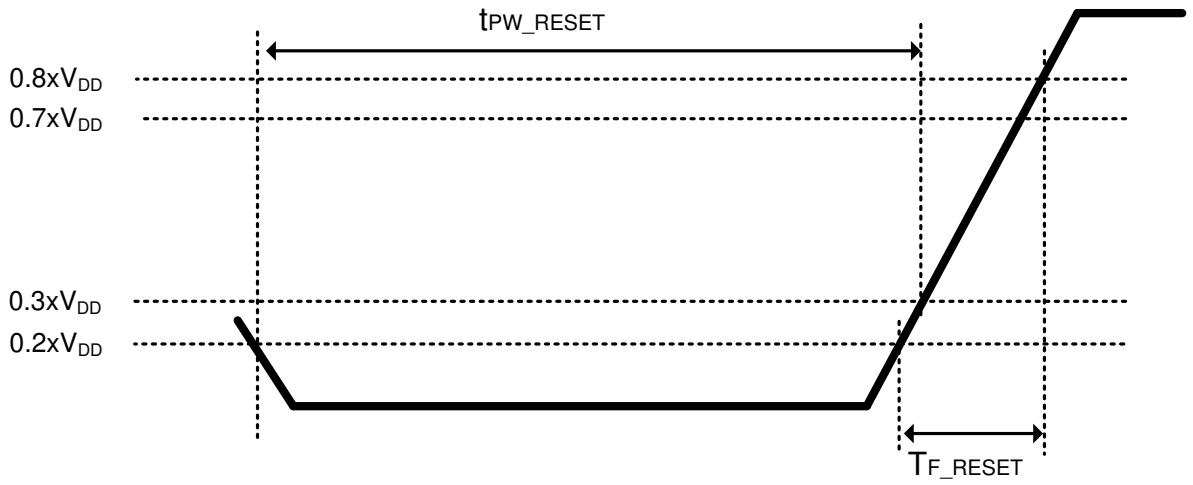

Figure 205. RESET# Input Slew Rate Definition

AC and DC Logic Input Levels for DQS Signals

Differential signal definition

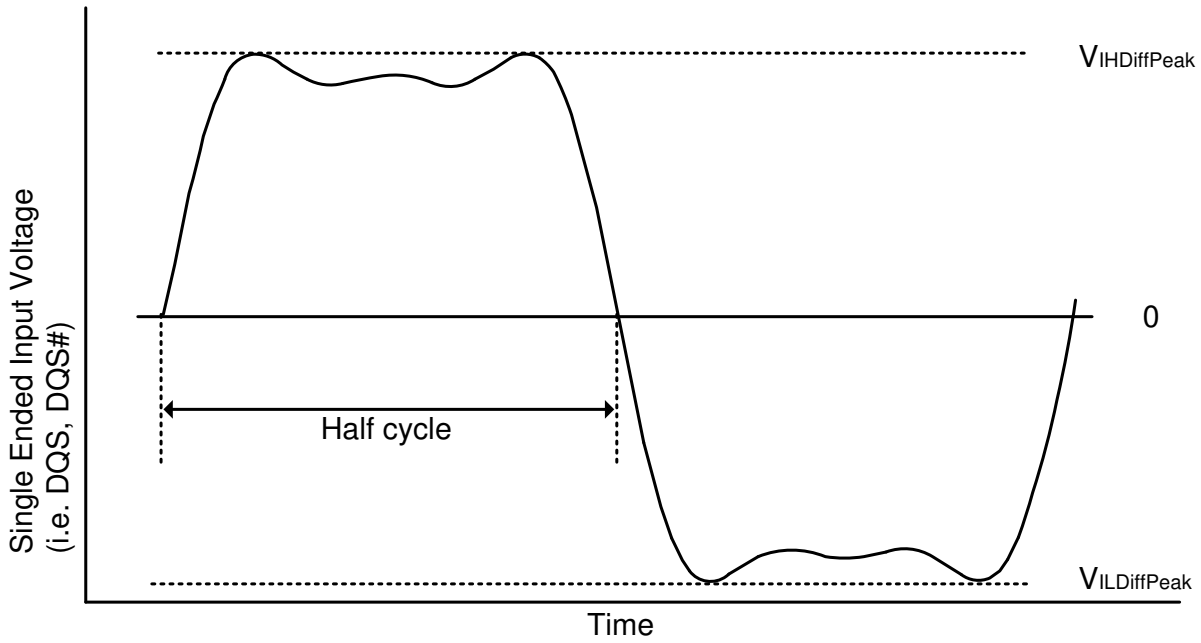

Figure 206. Definition of differential DQS Signal AC-swing Level

Differential swing requirements for DQS (DQS – DQS#)

Table 101. Differential AC and DC Input Levels for DQS

Symbol	Parameter	DDR4-2666		DDR4-3200		Unit	Note
		Min.	Max.	Min.	Max.		
$V_{IHDiffPeak}$	$V_{IH.DIFF.Peak}$ Voltage	150	-	140	-	mV	1,2
$V_{ILDiffPeak}$	$V_{IL.DIFF.Peak}$ Voltage	-	-150	-	-140	mV	1,2

Note 1. Used to define a differential signal slew-rate.
Note 2. These values are not defined; however, the differential signals DQS – DQS#, need to be within the respective limits Overshoot, Undershoot Specification for single-ended signals.

Peak voltage calculation method

The peak voltage of Differential DQS signals are calculated in a following equation.
VIH.DIFF.Peak Voltage = Max(f(t))
VIL.DIFF.Peak Voltage = Min(f(t))
f(t) = VDQS_t - VDQS_c

The Max(f(t)) or Min(f(t)) used to determine the midpoint which to reference the ±35% window of the exempt non-monotonic signaling shall be the smallest peak voltage observed in all UIs.

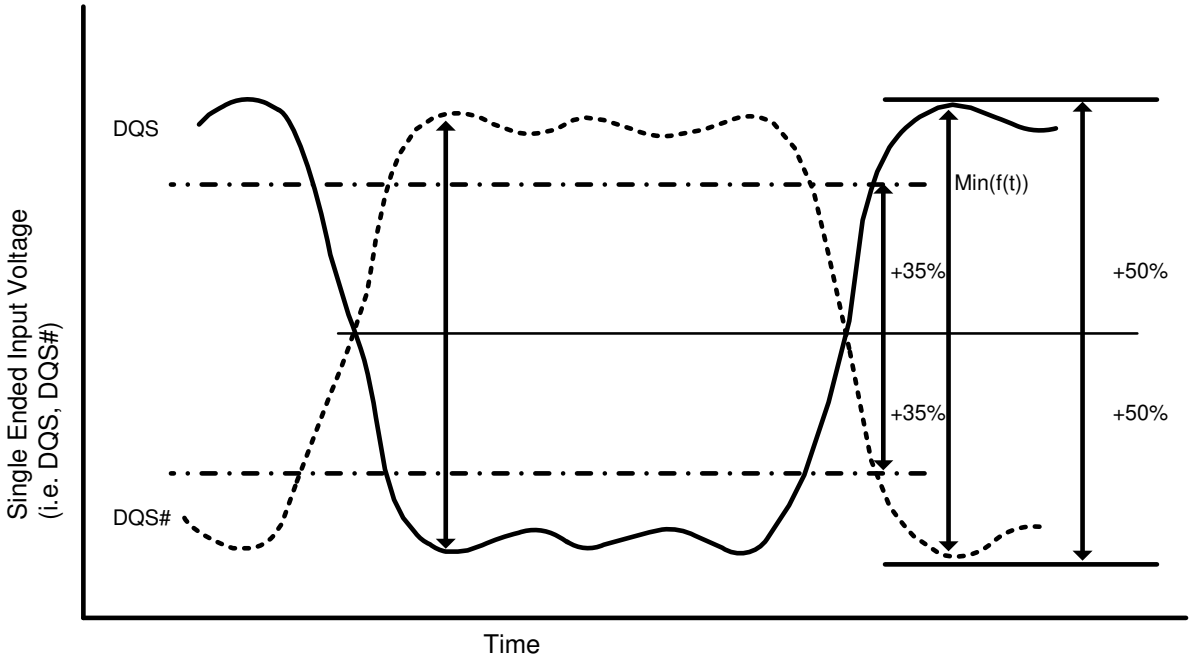

Figure 207. Definition of differential DQS Peak Voltage and rage of exempt non-monotonic signaling

Differential Input Cross Point Voltage

To achieve tight RxMask input requirements as well as output skew parameters with respect to strobe, the cross point voltage of differential input signals (DQS, DQS#) must meet the requirements in the table below. The differential input cross point voltage V_{IX_DQS} ($V_{IX_DQS_FR}$ and $V_{IX_DQS_RF}$) is measured from the actual cross point of DQS, DQS# relative to the V_{DQSmid} of the DQS and DQS# signals.

V_{DQSmid} is the midpoint of the minimum levels achieved by the transitioning DQS and DQS# signals, and noted by V_{DQS_trans}. V_{DQS_trans} is the difference between the lowest horizontal tangent above V_{DQSmid} of the transitioning DQS signals and the highest horizontal tangent below V_{DQSmid} of the transitioning DQS signals. A non-monotonic transitioning signal's ledge is exempt or not used in determination of a horizontal tangent provided the said ledge occurs within ± 35% of the midpoint of either $V_{IH.DIFF.Peak}$ Voltage (DQS rising) or $V_{IL.DIFF.Peak}$ Voltage (DQS# rising), as shown in the figure below.

A secondary horizontal tangent resulting from a ring-back transition is also exempt in determination of a horizontal tangent. That is, a falling transition's horizontal tangent is derived from its negative slope to zero slope transition (point A in the figure below), and a ring-back's horizontal tangent derived from its positive slope to zero slope transition (point B in the figure below) is not a valid horizontal tangent; and a rising transition's horizontal tangent is derived from its positive slope to zero slope transition (point C in the figure below) and a ring-back's horizontal tangent derived from its negative slope to zero slope transition (point D in the figure below) is not a valid horizontal tangent.

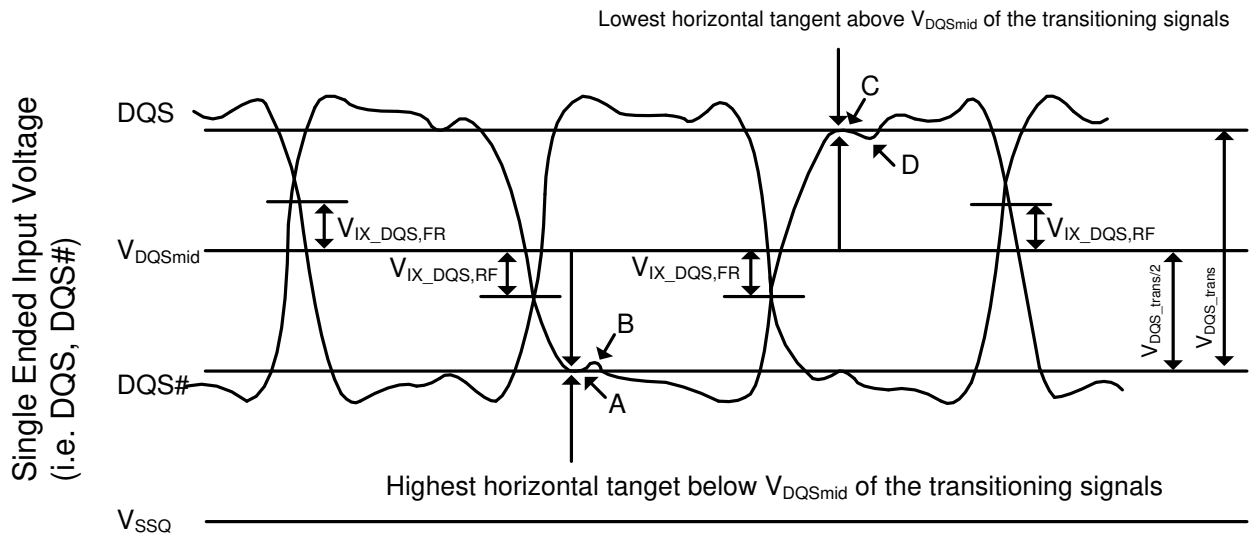

Figure 208. Vix Definition (DQS)

Table 102. Cross point voltage for DQS differential input signals

Symbol	Parameter	DDR4-2666/3200		Unit	Note
		Min.	Max.		
$V_{IX_DQS_Ratio}$	DQS and DQS# crossing relative to the midpoint of the DQS and DQS# signal swings	-	25	%	1,2
V_{DQSmid}_to_V_{cent}	V_{DQSmid} offset relative to V_{cent_DQ} (midpoint)	-	min(V_{IHdiff},50)	mV	3-5

Note 1. $V_{IX_DQS_Ratio}$ is DQS VIX crossing (V_{IX_DQS} _FR or $V_{IX_DQS_RF}$) divided by V_{DQS_trans}. V_{DQS_trans} is the difference between the lowest horizontal tangent above V_{DQSmid} of the transitioning DQS signals and the highest horizontal tangent below V_{DQSmid} of the transitioning DQS signals.

Note 2. V_{DQSmid} will be similar to the V_{REFDQ} internal setting value obtained during V_{REF} Training if the DQS and DQs drivers and paths are matched.

Note 3. The maximum limit shall not exceed the smaller of V_{IHdiff} minimum limit or 50mV.

Note 4. V_{IX} measurements are only applicable for transitioning DQS and DQS# signals when toggling data, preamble and high-z states are not applicable conditions.

Note 5. The parameter V_{DQSmid} is defined for simulation and ATE testing purposes, it is not expected to be tested in a system.

Differential Input Slew Rate Definition

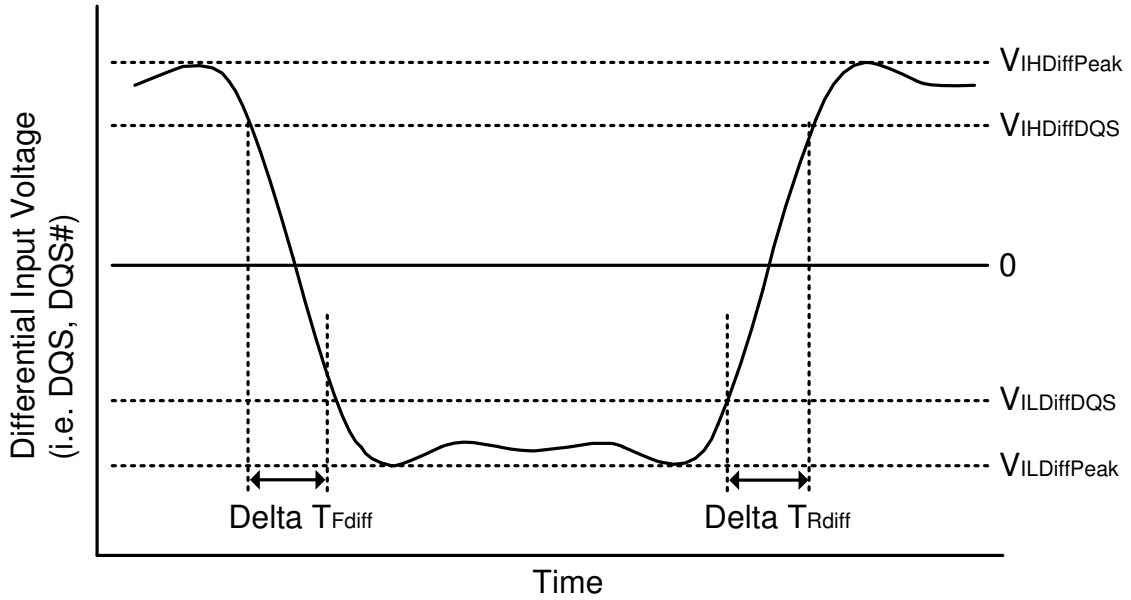

NOTE 1. Differential signal rising edge from VILDiff_DQS to VIHDiff_DQS must be monotonic slope.
NOTE 2. Differential signal falling edge from VIHDiff_DQS to VILDiff_DQS must be monotonic slope.

Figure 209. Differential Input Slew Rate Definition for DQS, DQS#

Table 103. Differential Input Slew Rate Definition for DQS, DQS#

Description	Measured		Defined by
	From	To	
Differential input slew rate for rising edge (DQS - DQS#)	V_{ILDiff_DQS}	V_{IHDiff_DQS}	$\lvert V_{ILDiff_DQS} - V_{IHDiff_DQS} \rvert$ / DeltaTRdiff
Differential input slew rate for falling edge (DQS - DQS#)	V_{IHDiff_DQS}	V_{ILDiff_DQS}	$\lvert V_{ILDiff_DQS} - V_{IHDiff_DQS} \rvert$ / DeltaTFdiff

Table 104. Differential Input Level for DQS, DQS#

Symbol	Parameter	DDR4-2666		DDR4-3200		Unit	Note
		Min.	Max.	Min.	Max.		
V_{IHDiff_DQS}	Differntial Input High	130	-	110	-	mV	
V_{ILDiff_DQS}	Differntial Input Low	-	-130	-	-110	mV	

Table 105. Differential Input Slew Rate for DQS, DQS#

Symbol	Parameter	DDR4-2666		DDR4-3200		Unit	Note
		Min.	Max.	Min.	Max.		
SRIdiff	Differential Input Slew Rate	2.5	18	2.5	18	V/ns	

Electrical Characteristics and AC Timing

Reference Load for AC Timing and Output Slew Rate

Reference Load for AC Timing and Output Slew Rate represents the effective reference load of 50 ohms used in defining the relevant AC timing parameters of the device as well as output slew rate measurements.

R_{ON} nominal of DQ, DQS and DQS# drivers uses 34 ohms to specify the relevant AC timing parameter values of the device.

The maximum DC High level of Output signal = 1.0 x V_{DDQ},
The minimum DC Low level of Output signal = { 34 /(34 + 50) } x V_{DDQ} = 0.4 x V_{DDQ}
The nominal reference level of an Output signal can be approximated by the following:
The center of maximum DC High and minimum DC Low = { (1 + 0.4) / 2 } x V_{DDQ} = 0.7 x V_{DDQ}

The actual reference level of Output signal might vary with driver Ron and reference load tolerances. Thus, the actual reference level or midpoint of an output signal is at the widest part of the output signal's eye. Prior to measuring AC parameters, the reference level of the verification tool should be set to an appropriate level.

It is not intended as a precise representation of any particular system environment or a depiction of the actual load presented by a production tester. System designers should use IBIS or other simulation tools to correlate the timing reference load to a system environment. Manufacturers correlate to their production test conditions, generally one or more coaxial transmission lines terminated at the tester electronics.

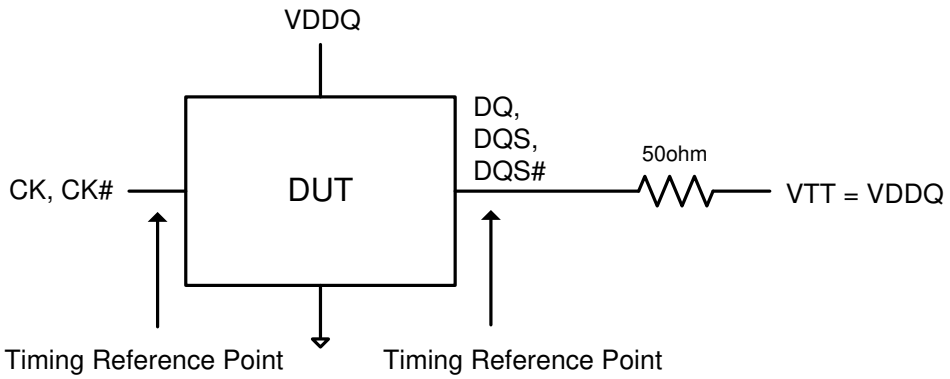

Figure 210. Reference Load for AC Timing and Output Slew Rate

Clock Specification

The jitter specified is a random jitter meeting a Gaussian distribution. Input clocks violating the min/max values may result in malfunction of the device.

Definitions for $t_{CK(abs)}$:

$t_{CK(abs)}$ is defined as the absolute clock period, as measured from one rising edge to the next consecutive rising edge. $t_{CK(abs)}$ is not subject to production test.

Definitions for $t_{CK(avg)}$ and nCK:

$t_{CK(avg)}$ is calculated as the average clock period across any consecutive 200 cycle window, where each clock period is calculated from rising edge to rising edge.

$$tCK(avg)=\left(\sum_{j=1}^{N} tCK(abs)_j\right) / N$$

Where N=200

Definitions for $t_{CH(avg)}$ and $t_{CL(avg)}$:

$t_{CH(avg)}$ is defined as the average high pulse width, as calculated across any consecutive 200 high pulses.

$$tCH(avg)=\left(\sum_{j=1}^{N} tCH_j\right) / \left(N \times tCK(avg)\right)$$

Where N=200

$t_{CL(avg)}$ is defined as the average low pulse width, as calculated across any consecutive 200 low pulses.

$$tCL(avg)=\left(\sum_{j=1}^{N} tCL_j\right) / \left(N \times tCK(avg)\right)$$

Where N=200

Definitions for $t_{ERR(nper)}$:

t_{ERR} is defined as the cumulative error across n consecutive cycles of n x $t_{CK(avg)}$.
t_{ERR} is not subject to production test.

Command, Control, and Address Setup, Hold, and Derating

The total t_{IS} (setup time) and t_{IH} (hold time) required is calculated to account for slew rate variation by adding the data sheet $t_{IS(base)}$ values, the $V_{IL(AC)}/V_{IH(AC)}$ points, and $t_{IH(base)}$ values, the $V_{IL(DC)}/V_{IH(DC)}$ points; to the Δt_{IS} and Δt_{IH} derating values, respectively. The base values are derived with single-end signals at 1V/ns and differential clock at 2V/ns. Example: t_{IS} (total setup time) = $t_{IS(base)} + \Delta t_{IS}$. For a valid transition, the input signal has to remain above/below $V_{IH(AC)}/V_{IL(AC)}$ for the time defined by t_{VAC}.

Although the total setup time for slow slew rates might be negative (for example, a valid input signal will not have reached $V_{IH(AC)}/V_{IL(AC)}$ at the time of the rising clock transition), a valid input signal is still required to complete the transition and to reach $V_{IH(AC)}/V_{IL(AC)}$. For slew rates that fall between the values listed in derating tables, the derating values may be obtained by linear interpolation.

Setup (t_{IS}) nominal slew rate for a rising signal is defined as the slew rate between the last crossing of $V_{IL(DC)max}$ and the first crossing of $V_{IH(AC)min}$ that does not ring back below $V_{IH(DC)min}$. Setup (t_{IS}) nominal slew rate for a falling signal is defined as the slew rate between the last crossing of $V_{IH(DC)min}$ and the first crossing of $V_{IL(AC)max}$ that does not ring back above $V_{IL(DC)max}$.

Hold (t_{IH}) nominal slew rate for a rising signal is defined as the slew rate between the last crossing of $V_{IL(DC)max}$ and the first crossing of $V_{IH(AC)min}$ that does not ring back below $V_{IH(DC)min}$. Hold (t_{IH}) nominal slew rate for a falling signal is defined as the slew rate between the last crossing of $V_{IH(DC)min}$ and the first crossing of $V_{IL(AC)min}$ that does not ring back above $V_{IL(DC)max}$.

Table 106. Command, Address, Control Setup and Hold Values

Symbol	Reference	DDR4-2666	DDR4-3200	Unit
$t_{IS(base, AC90)}$	$V_{IH(AC)}/V_{IL(AC)}$	55	40	ps
$t_{IH(base, DC65)}$	$V_{IH(DC)}/V_{IL(DC)}$	80	65	ps
$t_{IS}/t_{IH(VREF)}$	-	145	130	ps

Note 1. Base ac/dc referenced for 1V/ns slew rate and 2 V/ns clock slew rate.
Note 2. Values listed are referenced only; applicable limits are defined elsewhere.

Table 107. Command, Address, Control Input Voltage Values

Symbol	Reference	DDR4-2666	DDR4-3200	Unit
$V_{IH.CA(AC)min}$	$V_{IH(AC)}/V_{IL(AC)}$	90	90	mV
$V_{IH.CA(DC)min}$	$V_{IH(DC)}/V_{IL(DC)}$	65	65	mV
$V_{IL.CA(DC)max}$	$V_{IH(DC)}/V_{IL(DC)}$	-65	-65	mV
$V_{IL.CA(AC)max}$	$V_{IH(AC)}/V_{IL(AC)}$	-90	-90	mV

Note 1. Command, Address, Control input levels relative to V_{REFCA}.
Note 2. Values listed are referenced only; applicable limits are defined elsewhere.

Table 108. Derating values DDR4-2666/3200 tIS/tIH – AC/DC based

Δt_{IS}, Δt_{IH} derating in [ps] AC/DC based -- $V_{IH(AC)}/V_{IL(AC)}$ = ±90mV, $V_{IH(DC)}/V_{IL(DC)}$ = ±65mV; relative to V_{REFCA}																	
		CK, CK# Differential Slew Rate															
		10.0 V/ns		8.0 V/ns		6.0 V/ns		4.0 V/ns		3.0 V/ns		2.0 V/ns		1.5 V/ns		1.0 V/ns	
		ΔtIS	ΔtIH	ΔtIS	ΔtIH	ΔtIS	ΔtIH	ΔtIS	ΔtIH	ΔtIS	ΔtIH	ΔtIS	ΔtIH	ΔtIS	ΔtIH	ΔtIS	ΔtIH
CMD, ADDR, CNTL Input Slew rate V/ns	**7.0**	68	47	69	47	70	48	72	50	73	52	77	56	85	63	100	78
	6.0	66	45	67	46	68	47	69	49	71	50	75	54	83	62	98	77
	5.0	63	43	64	44	65	45	66	46	68	48	72	52	80	60	95	75
	4.0	59	40	59	40	60	41	62	43	64	45	68	49	75	56	90	71
	3.0	51	34	52	35	53	36	54	38	56	40	60	43	68	51	83	66
	2.0	36	24	37	24	38	25	39	27	41	29	45	33	53	40	68	55
	1.5	21	13	22	13	23	14	24	16	26	18	30	22	38	29	53	44
	1.0	-9	-9	-8	-8	-8	-8	-6	-6	-4	-4	**0**	**0**	8	8	23	23
	0.9	-15	-13	-15	-12	-14	-11	-12	-9	-10	-7	-6	-4	1	4	16	19
	0.8	-23	-17	-23	-17	-22	-16	-20	-14	-18	-12	-14	-8	-7	-1	8	14
	0.7	-34	-23	-33	-22	-32	-21	-30	-20	-28	-18	-25	-14	-17	-6	-2	9
	0.6	-47	-31	-47	-30	-46	-29	-44	-27	-42	-25	-38	-22	-31	-14	-16	1
	0.5	-67	-42	-66	-41	-65	-40	-63	-38	-61	-36	-58	-33	-50	-25	-35	-10
	0.4	-95	-58	-95	-57	-94	-56	-92	-54	-90	-53	-86	-49	-79	-41	-64	-26

Package Outline Drawing Information

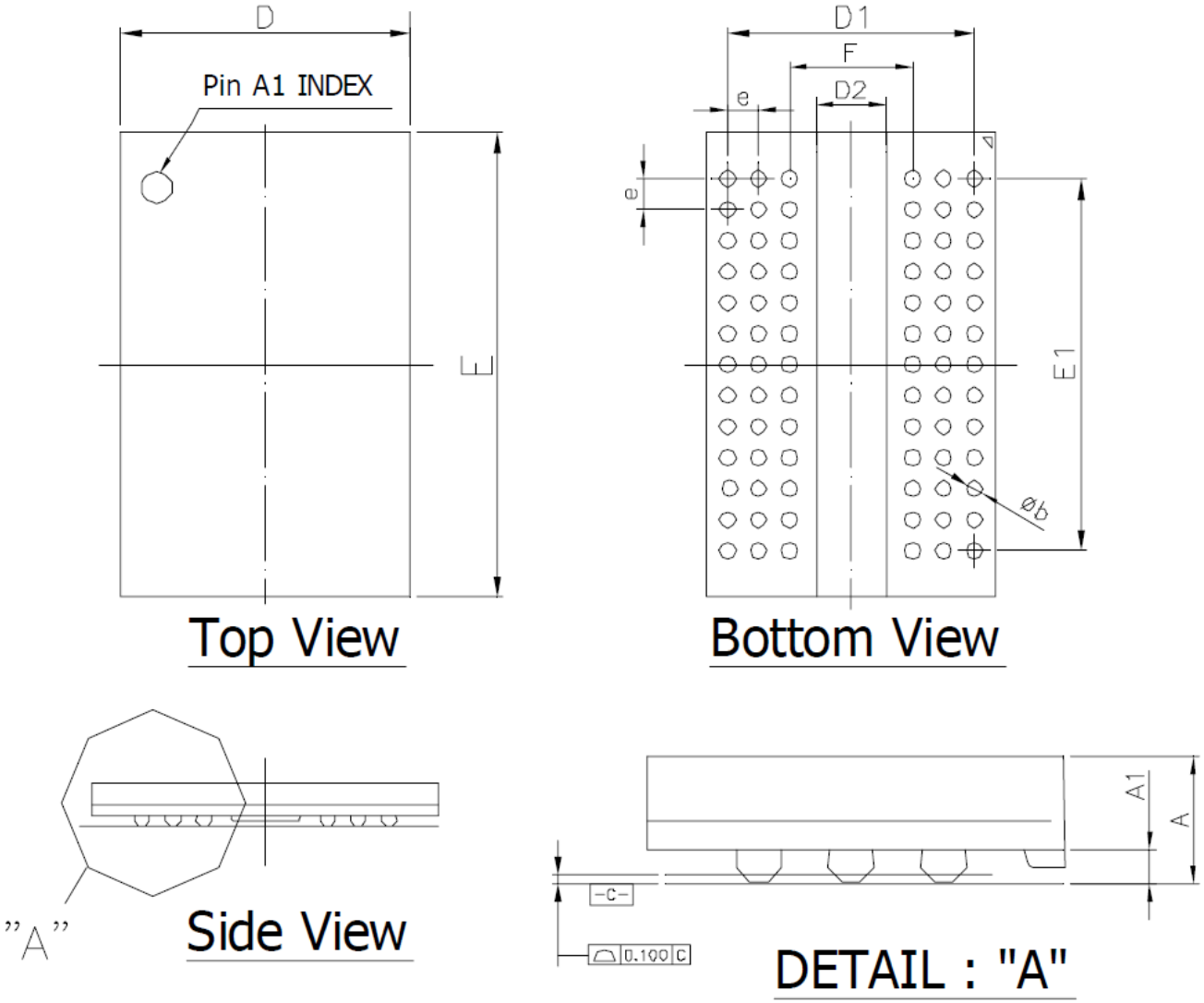

Symbol	Dimension in inch			Dimension in mm		
	Min	Nom	Max	Min	Nom	Max
A	--	--	0.047	--	--	1.20
A1	0.010	--	0.016	0.25	--	0.40
D	0.291	0.295	0.299	7.40	7.50	7.60
E	0.468	0.472	0.476	11.90	12.00	12.10
D1	--	0.252	--	--	6.40	--
E1	--	0.378	--	--	9.60	--
F	--	0.126	--	--	3.20	--
e	--	0.031	--	--	0.80	--
b	0.016	0.018	0.020	0.40	0.45	0.50
D2	--	--	0.081	--	--	2.05

Figure 211. 78-Ball FBGA Package 7.5x12x1.2mm(max)